SUZUKI

AN400

SERVICE MANUAL

99500-34080-01E

FOREWORD

This manual contains an introductory description on the SUZUKI AN400 and procedures for its inspection/service and overhaul of its main components. Other information considered as generally known is not included.
Read the GENERAL INFORMATION section to familiarize yourself with the motorcycle and its maintenance. Use this section as well as other sections to use as a guide for proper inspection and service.
This manual will help you know the motorcycle better so that you can assure your customers of fast and reliable service.

- *This manual has been prepared on the basis of the latest specifications at the time of publication. If modifications have been made since then, differences may exist between the content of this manual and the actual motorcycle.*
- *Illustrations in this manual are used to show the basic principles of operation and work procedures. They may not represent the actual motorcycle exactly in detail.*
- *This manual is written for persons who have enough knowledge, skills and tools, including special tools, for servicing SUZUKI motorcycles. If you do not have the proper knowledge and tools, ask your authorized SUZUKI motorcycle dealer to help you.*

⚠ WARNING

Inexperienced mechanics or mechanics without the proper tools and equipment may not be able to properly perform the services described in this manual.
Improper repair may result in injury to the mechanic and may render the motorcycle unsafe for the rider and passenger.

SUZUKI MOTOR CORPORATION

GROUP INDEX

HOW TO USE THIS MANUAL
TO LOCATE WHAT YOU ARE LOOKING FOR:

1. The text of this manual is divided into sections.
2. The section titles are listed in the GROUP INDEX.
3. Holding the manual as shown at the right will allow you to find the first page of the section easily.
4. The contents are listed on the first page of each section to help you find the item and page you need.

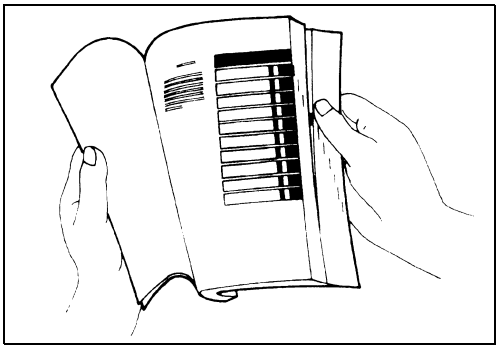

COMPONENT PARTS AND WORK TO BE DONE

Under the name of each system or unit, is its exploded view. Work instructions and other service information such as the tightening torque, lubricating points and locking agent points, are provided.
Example: Front wheel

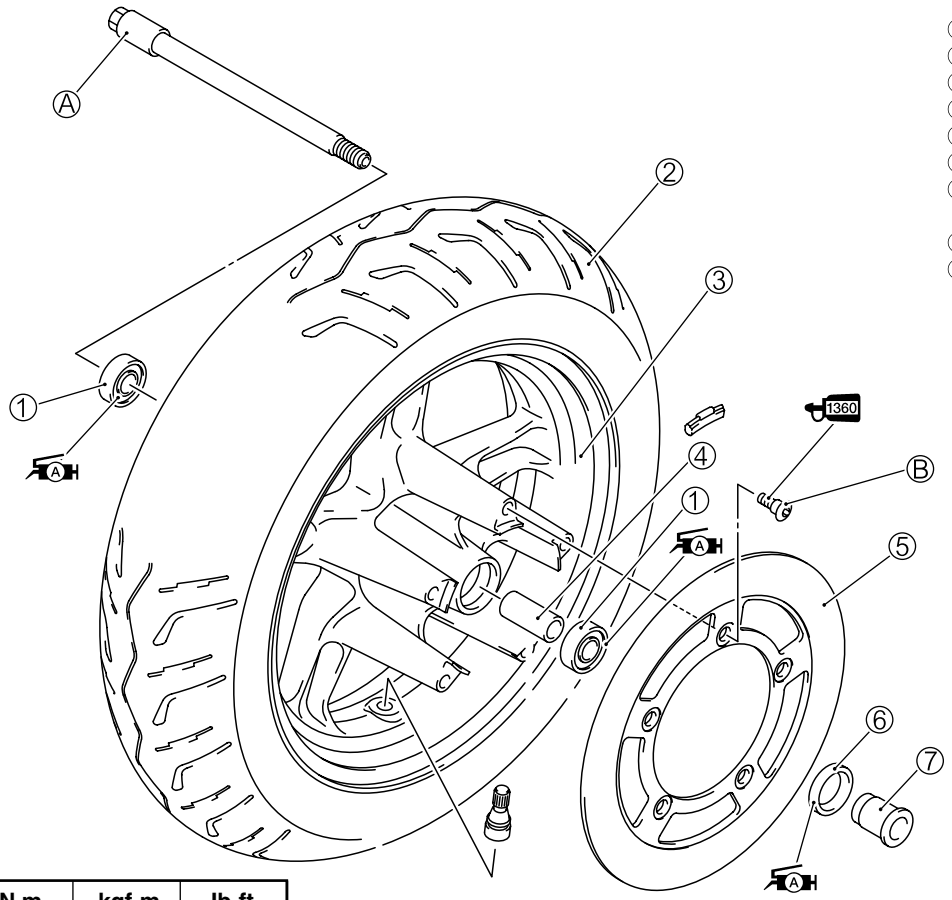

① Wheel bearing
② Front tire
③ Front wheel
④ Spacer
⑤ Brake disc
⑥ Dust seal
⑦ Spacer

Ⓐ Front axle
Ⓑ Brake disc bolt

ITEM	N·m	kgf-m	lb-ft
Ⓐ	65	6.5	47.0
Ⓑ	23	2.3	16.5

SYMBOL

Listed in the table below are the symbols indicating instructions and other information necessary for servicing. The meaning of each symbol is also included in the table.

SYMBOL	DEFINITION	SYMBOL	DEFINITION
	Torque control required. Data beside it indicates specified torque.	1360	Apply THREAD LOCK SUPER “1360”. 99000-32130
OIL	Apply oil. Use engine oil unless otherwise specified.	LLC	Use engine coolant. 99000-99032-11X
M/O	Apply molybdenum oil solution. (Mixture of engine oil and SUZUKI MOLY PASTE in a ratio of 1:1)	FORK	Use fork oil. 99000-99044-10G
A	Apply SUZUKI SUPER GREASE “A”. 99000-25010 (Others) 99000-25030 (USA)	BF	Apply or use brake fluid.
M	Apply SUZUKI MOLY PASTE. 99000-25140	V	Measure in voltage range.
S	Apply SUZUKI SILICONE GREASE. 99000-25100	A	Measure in current range.
1215	Apply SUZUKI BOND “1215”. 99000-31110 (Except USA)	Ω	Measure in resistance range.
1207B	Apply SUZUKI BOND “1207B”. 99104-31140 (USA)		Measure in diode test range.
1216	Apply SUZUKI BOND “1216”. 99000-31230		Measure in continuity test range.
1303	Apply THREAD LOCK SUPER “1303”. 99000-32030	TOOL	Use special tool.
1322	Apply THREAD LOCK SUPER “1322”. 99000-32110 (Except USA)	DATA	Indication of service data.
1342	Apply THREAD LOCK “1342”. 99000-32050 (USA)		

ABBREVIATIONS USED IN THIS MANUAL

A

ABDC : After Bottom Dead Center
AC : Alternating Current
ACL : Air Cleaner, Air Cleaner Box
API : American Petroleum Institute
ATDC : After Top Dead Center
ATM Pressure: Atmospheric Pressure
A/F : Air Fuel Mixture

B

BBDC : Before Bottom Dead Center
BTDC : Before Top Dead Center
B+ : Battery Positive Voltage

C

CKP Sensor : Crankshaft Position Sensor (CKPS)
CKT : Circuit
CLP Switch : Clutch Lever Position Switch (Clutch Switch)
CO : Carbon Monoxide
CPU : Central Processing Unit

D

DC : Direct Current
DMC : Dealer Mode Coupler
DOHC : Double Over Head Camshaft
DRL : Daytime Running Light

E

ECM : Engine Control Module
Engine Control Unit (ECU)
(FI Control Unit)
ECT Sensor : Engine Coolant Temperature Sensor (ECTS), Water Temp. Sensor (WTS)
EVAP : Evaporative Emission
EVAP Canister: Evaporative Emission Canister (Canister)

F

FI : Fuel Injection, Fuel Injector
FP : Fuel Pump
FPR : Fuel Pressure Regulator
FP Relay : Fuel Pump Relay
FTPC Valve : Fuel Tank Pressure Control Valve

G

GEN : Generator
GND : Ground
GP Switch : Gear Position Switch

H

HC : Hydrocarbons

I

IAC Valve : Idle Air Control Valve
IAP Sensor : Intake Air Pressure Sensor (IAPS)
IAT Sensor : Intake Air Temperature Sensor (IATS)
IG : Ignition

L

LCD : Liquid Crystal Display
LED : Light Emitting Diode (Malfunction Indicator Lamp)
LH : Left Hand

M

MAL-Code	: Malfunction Code (Diagnostic Code)
Max	: Maximum
MIL	: Malfunction Indicator Lamp (LED)
Min	: Minimum

N

NOX	: Nitrogen Oxides

O

OHC	: Over Head Camshaft
OLS	: Oil Level Switch
OPS	: Oil Pressure Switch

P

PCV	: Positive Crankcase Ventilation (Crankcase Breather)

R

RH	: Right Hand
ROM	: Read Only Memory

S

SAE	: Society of Automotive Engineers

T

TO Sensor	: Tip Over Sensor (TOS)
TP Sensor	: Throttle Position Sensor (TPS)

GENERAL INFORMATION

1

CONTENTS

WARNING/CAUTION/NOTE

Please read this manual and follow its instructions carefully. To emphasize special information, the symbol and the words WARNING, CAUTION and NOTE have special meanings. Pay special attention to the messages highlighted by these signal words.

⚠ WARNING

Indicates a potential hazard that could result in death or injury.

CAUTION

Indicates a potential hazard that could result in motorcycle damage.

NOTE:
Indicates special information to make maintenance easier or instructions clearer.

Please note, however, that the warnings and cautions contained in this manual cannot possibly cover all potential hazards relating to the servicing, or lack of servicing, of the motorcycle. In addition to the WARNINGS and CAUTIONS stated, you must use good judgement and basic mechanical safety principles. If you are unsure about how to perform a particular service operation, ask a more experienced mechanic for advice.

GENERAL PRECAUTIONS

⚠ WARNING

* **Proper service and repair procedures are important for the safety of the service mechanic and the safety and reliability of the motorcycle.**
* **When 2 or more persons work together, pay attention to the safety of each other.**
* **When it is necessary to run the engine indoors, make sure that exhaust gas in forced outdoors.**
* **When working with toxic or flammable materials, make sure that the area you work in is well-ventilated and that you follow all of the material manufacturer's instructions.**
* **Never use gasoline as a cleaning solvent.**
* **To avoid getting burned, do not touch the engine, engine oil, radiator and exhaust system until they have cooled.**
* **After servicing the fuel, oil, water, exhaust or brake systems, check all lines and fittings related to the system for leaks.**

CAUTION

* If parts replacement is necessary, replace the parts with Suzuki Genuine Parts or their equivalent.
* When removing parts that are to be reused, keep them arranged in an orderly manner so that they may be reinstalled in the proper order and orientation.
* Be sure to use special tools when instructed.
* Make sure that all parts used in reassembly are clean. Lubricate them when specified.
* Use the specified lubricant, bond, or sealant.
* When removing the battery, disconnect the negative cable first and then the positive cable.
* When reconnecting the battery, connect the positive cable first and then the negative cable, and replace the terminal cover on the positive terminal.
* When performing service to electrical parts, if the service procedures not require use of battery power, disconnect the negative cable the battery.
* When tightening the cylinder head and case bolts and nuts, tighten the larger sizes first. Always tighten the bolts and nuts diagonally from the inside toward outside and to the specified tightening torque.
* Whenever you remove oil seals, gaskets, packing, O-rings, locking washers, self-locking nuts, cotter pins, circlips and certain other parts as specified, be sure to replace them with new ones. Also, before installing these new parts, be sure to remove any left over material from the mating surfaces.
* Never reuse a circlip. When installing a new circlip, take care not to expand the end gap larger than required to slip the circlip over the shaft. After installing a circlip, always ensure that it is completely seated in its groove and securely fitted.
* Use a torque wrench to tighten fasteners to the specified torque. Wipe off grease and oil if a thread is smeared with them.
* After reassembling, check parts for tightness and proper operation.

* To protect the environment, do not unlawfully dispose of used motor oil, engine coolant and other fluids: batteries, and tires.
* To protect Earth's natural resources, properly dispose of used motorcycle and parts.

SUZUKI AN400 (’03-MODEL)

RIGHT SIDE

LEFT SIDE

- Difference between photographs and actual motorcycles depends on the markets.

SERIAL NUMBER LOCATION

The frame serial number or V.I.N. (Vehicle Identification Number) ① is stamped on the right side of the frame tube. The engine serial number ② is located on the left side of the crankcase. These numbers are required especially for registering the machine and ordering spare parts.

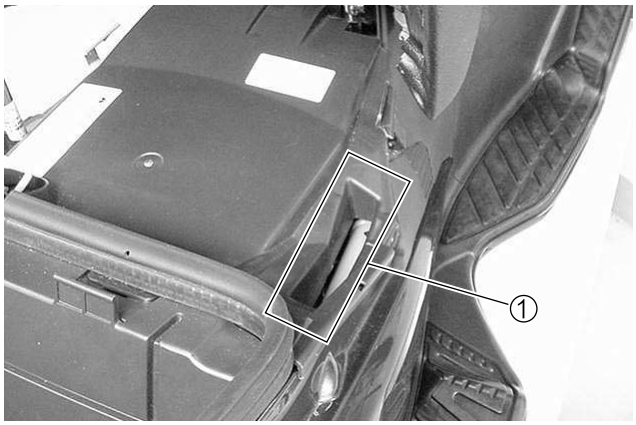

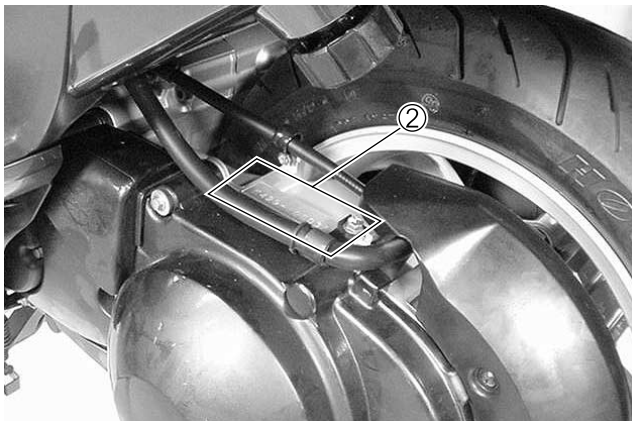

FUEL, OIL AND ENGINE COOLANT RECOMMENDATION

FUEL (FOR USA AND CANADA)

Use only unleaded gasoline of at least 87 pump octane ($\frac{R+M}{2}$) or 91 octane or higher rated by the research method.

Gasoline containing MTBE (Methyl Tertiary Butyl Ether), less than 10% ethanol, or less than 5% methanol with appropriate cosolvents and corrosion inhibitor is permissible.

FUEL (FOR OTHER COUNTRIES)

Gasoline used should be graded 91 octane (Research Method) or higher. Unleaded gasoline is recommended.

ENGINE OIL AND TRANSMISSION OIL (FOR USA)

SUZUKI recommends the use of SUZUKI PERFORMANCE 4 MOTOR OIL or an oil which is rated SF or SG under the API (American Pertoleum Institute) service classification. The recommended viscosity is SAE 10W-40. If an SAE 10W-40 oil is not available, select and alternative according to the following chart.

ENGINE OIL AND TRANSMISSION OIL (FOR OTHER COUNTRIES)

Use a premium quality 4-stroke motor oil to ensure longer service life of your motorcycle. Use only oils which are rated SF or SG under the API service classification. The recommended viscosity is SAE 10W-40. If an SAE 10W-40 motor oil is not available, select an alternative according to the right chart.

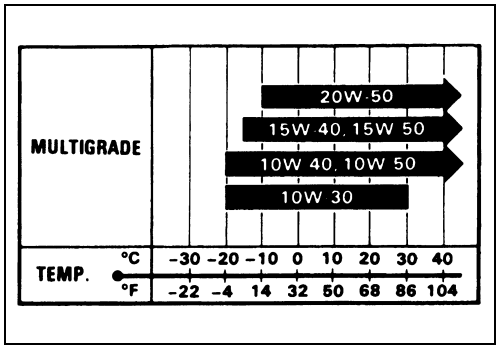

FINAL GEAR OIL

Use hypoid gear oil that meets the API service classification GL-5 and is rated SAE #90. Use a hypoid gear oil with a rating of SAE #80 if the motorcycle is operated where the ambient temperature is below 0 °C (32 °F).

BRAKE FLUID

Specification and classification: DOT 4

⚠ WARNING

Since the brake system of this motorcycle is filled with a glycol-based brake fluid by the manufacturer, do not use or mix different types of fluid such as silicone-based and petroleum-based fluid for refilling the system, otherwise serious damage will result.
Do not use any brake fluid taken from old or used or unsealed containers.
Never re-use brake fluid left over from a previous servicing, which has been stored for a long period.

FRONT FORK OIL

Use fork oil #10 or an equivalent fork oil.

ENGINE COOLANT

Use an anti-freeze/engine coolant compatible with an aluminum radiator, mixed with distilled water only.

WATER FOR MIXING

Use distilled water only. Water other than distilled water can corrode and clog the aluminum radiator.

ANTI-FREEZE/ENGINE COOLANT

The engine coolant perform as a corrosion and rust inhibitor as well as anti-freeze. Therefore, the engine coolant should be used at all times even though the atmospheric temperature in your area does not go down to freezing point.
Suzuki recommends the use of SUZUKI COOLANT anti-freeze/engine coolant. If this is not available, use an equivalent which is compatible with an aluminum radiator.

LIQUID AMOUNT OF WATER/ENGINE COOLANT

Solution capacity (total): Approx. 1 300 ml (1.4/1.1 US/Imp qt)

For engine coolant mixture information, refer to cooling system section, page 6-3.

CAUTION

Mixing of anti-freeze/engine coolant should be limited to 60%. Mixing beyond it would reduce its efficiency. If the anti-freeze/engine coolant mixing ratio is below 50%, rust inhabiting performance is greatly reduced. Be sure to mix it above 50% even though the atmospheric temperature does not go down to the freezing point.

BREAK-IN PROCEDURES

During manufacture only the best possible materials are used and all machined parts are finished to a very high standard but it is still necessary to allow the moving parts to “BREAK-IN” before subjecting the engine to maximum stresses. The future performance and reliability of the engine depends on the care and restraint exercised during its early life. The general rules are as follows.

- Keep to these break-in engine speed limits:

Initial 800 km: Below 4 000 r/min
Up to 1 600 km: Below 6 000 r/min

- Upon reaching an odometer reading of 1600 km you can subject the motorcycle to full throttle operation.

INFORMATION LABELS

①	Warning safety label
②	Engine starting label
③	Screen warning label
④	Tire pressure label
⑤	Fuel caution label (For E-02)
⑥	Loading capacity label
⑦	ID label
⑧	Information label (For E-03, 28, 33)
⑨	Noise label (For E-03, 33)

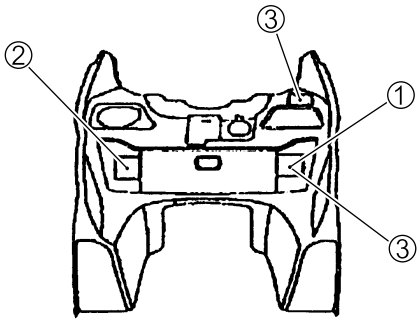

Front box

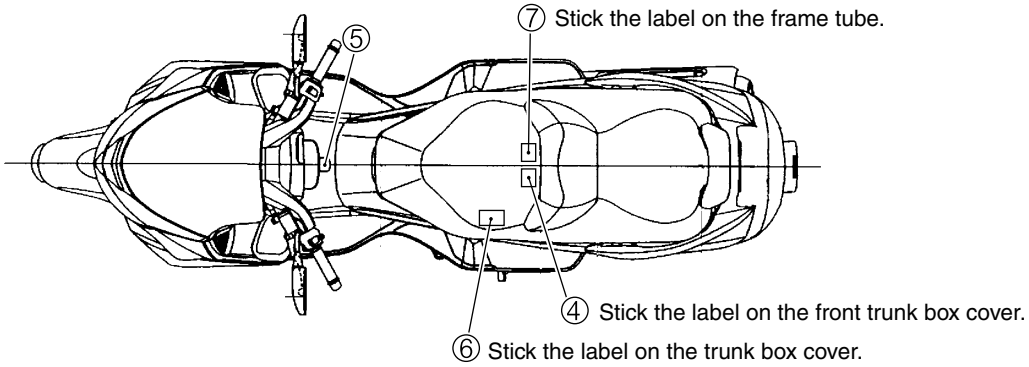

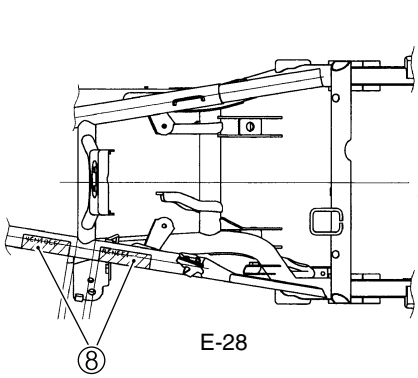

E-28

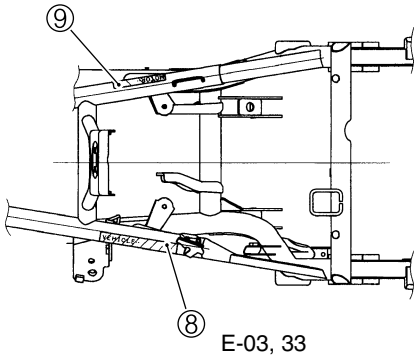

E-03, 33

SPECIFICATIONS

DIMENSIONS AND DRY MASS

Overall length	2 260 mm (89.0 in)
Overall width	760 mm (29.9 in)
Overall height	1 375 mm (54.1 in)
Wheelbase	1 590 mm (62.6 in)
Ground clearance	125 mm (4.9 in)
Seat height	695 mm (27.4 in)
Dry mass	184 kg (405 lbs)

ENGINE

Type	4-stroke, liquid-cooled, OHC
Number of cylinders	1
Bore	83.0 mm (3.268 in)
Stroke	71.2 mm (2.803 in)
Piston displacement	385 cm^3 (23.5 cu.in)
Compression ratio	10.2 : 1
Fuel system	Fuel injection
Air cleaner	Polyurethane foam element
Starter system	Electric
Lubrication system	Wet sump
Idle speed	1 400 ± 100 r/min

DRIVE TRAIN

Clutch	Dry shoe,automatic,centrifugal type
Gearshift pattern	Automatic
Final reduction ratio	6.168 (31/14 × 39/14)
Gear ratio	2.203 – 0.854 (variable change)
Drive system	V-belt drive

CHASSIS

Front suspension	Telescopic,coil spring,oil damped
Rear suspension	Link type,coil spring,oil damped
Front fork stroke	100 mm (3.9 in)
Rear wheel travel	100 mm (3.9 in)
Caster	27°
Trail	106 mm (4.2 in)
Steering angle	40° (right and left)
Turning radius	2.8 m (9.2 ft)
Front brake	Disc brake
Rear brake	Disc brake
Front tire size	110/90-13 M/C 55P,tubeless
Rear tire size	130/70-13 M/C 63P,tubeless

ELECTRICAL

Ignition type	Electronic ignition (Transistorized)
Ignition timing	10 ° B.T.D.C.at 1 400 r/min
Spark plug	NGK CR7E or DENSO U22ESR-N
Battery	12 V 28.8 kC (8 Ah)/10 HR
Generator	Three-phase A.C.generator
Main fuse	30 A
Fuse	10/15/10/10/10/10 A
Headlight	12 V 35/35 W
Position/parking light	12 V 5 W (For…E-02,19, 54)
Brake light/Taillight	12 V 21/5 W × 2
License plate light	12 V 5 W
Trunk light	12 V 5 W
Turn signal light	12 V 21 W
Speedometer/Tachometer light	12 V 1.7 W
Coolant temperature gauge light	12 V 1.7 W
Fuel level gauge light	12 V 1.7 W
Turn signal indicator light	12 V 1.7 W × 2
High beam indicator light	12 V 1.7 W
Brake-lock indicator light	12 V 1.7 W
Oil change indicator light	12 V 1.7 W
Fuel injection warning light	12 V 1.7 W

CAPACITIES

Fuel tank, including reserve	13.0 L (3.4/2.9 US/Imp gal)
Engine oil, oil change	1 900 ml (2.0/1.7 US/Imp qt)
with filter change	2 000 ml (2.1/1.8 US/Imp qt)
overhaul	2 300 ml (2.4/2.0 US/Imp qt)
Final gear oil, oil change	190 ml (6.4/6.7 US/Imp oz)
overhaul	200 ml (6.8/7.0 US/Imp oz)
Front fork oil (each leg)	284 ml (9.6/10.0 US/Imp oz)
Coolant	1.3 L (1.4/1.1 US/Imp qt)

These specifications are subject to change without notice.

COUNTRY AND AREA CODES

The following codes stand for the applicable country (-ies) and area (-s).

CODE	COUNTRY or AREA
E-02	U.K.
E-03	U.S.A. (Except for California)
E-19	EU
E-28	Canada
E-33	California (U.S.A.)
E-54	Israel

PERIODIC MAINTENANCE

CONTENTS

PERIODIC MAINTENANCE SCHEDULE

The chart below lists the recommended intervals for all the required periodic service work necessary to keep the motorcycle operating at peak performance and economy. Mileages are expressed in terms of kilometers, miles and time for your convenience.

NOTE:

More frequent servicing may be performed on motorcycles that are used under severe conditions.

PERIODIC MAINTENANCE CHART

Interval / Item	miles	600	4 000	7 500	11 000	14 500
	km	1 000	6 000	12 000	18 000	24 000
	months	1	6	12	18	24
Air cleaner element		Clean every 3 000 km (1 800 miles)				
Exhaust pipe bolts and muffler bolts		T	T	T	T	T
Valve clearance		I	I	I	I	I
Spark plug		—	I	R	I	R
Fuel line		—	I	I	I	I
		Replace every 4 years				
Engine oil		R	R	R	R	R
Engine oil filter		R	—	—	R	—
Final gear oil		—	—	R	—	R
Idle speed		I	I	I	I	I
Throttle cable play		I	I	I	I	I
Cooling fan filter		Clean every 3 000 km (1 800 miles)				
Radiator hose		—	I	I	I	I
		Replace every 4 years				
Engine coolant		Replace every 2 years				
Drive V-belt		—	—	I	—	R
Evaporative emission control system E-33 (California) model only		—	—	I	—	I
		Replace vapor hose every 4 years				
PAIR (air supply) system		—	—	I	—	I
Brake		I	I	I	I	I
Brake hose		—	I	I	I	I
		Replace every 4 years				
Brake fluid		—	I	I	I	I
		Replace every 2 years				
Steering		I	—	I	—	I
Front fork		—	—	I	—	I
Rear suspension		—	—	I	—	I
Tire		I	I	I	I	I
Chassis bolts and nuts		T	T	T	T	T

NOTE:

I=Inspect and clean, adjust, replace or lubricate as necessary;

R=Replace; T=Tighten

LUBRICATION POINTS

Proper lubrication is important for smooth operation and long life of each working part of the motorcycle. Major lubrication points are indicated below.

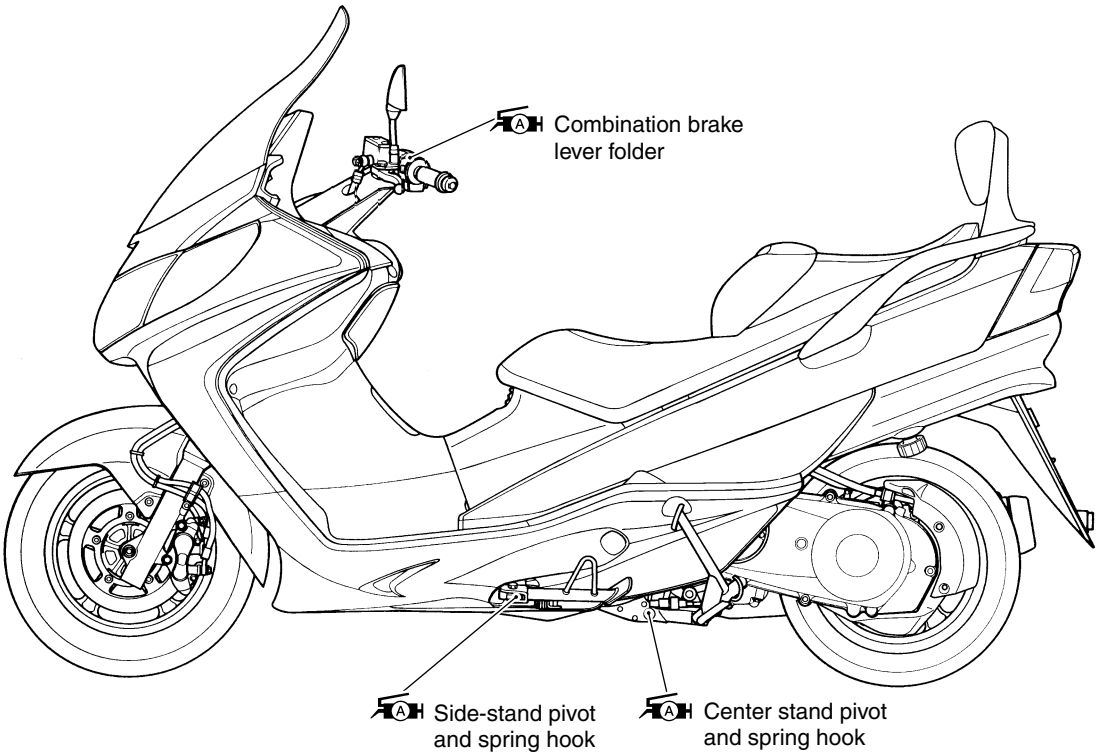

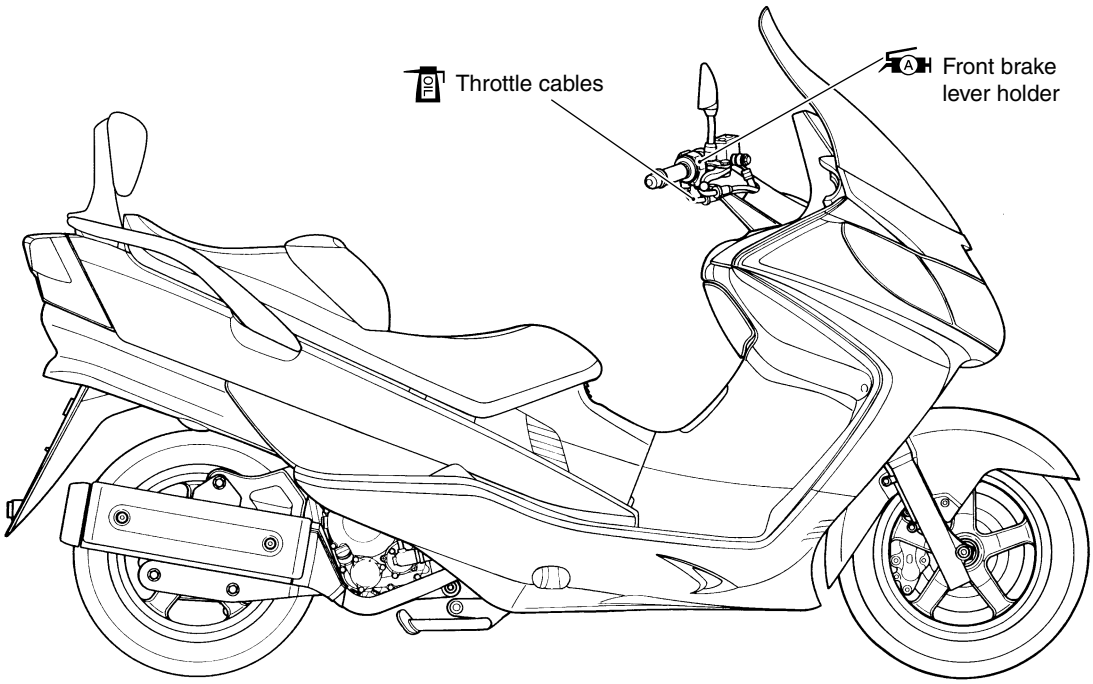

NOTE:

* *Before lubricating each part, clean off any rusty spots and wipe off any grease, oil, dirt or grime.*
* *Lubricate exposed parts which are subject to rust, with a rust preventative spray whenever the motorcycle has been operated under wet or rainy conditions.*

MAINTENANCE AND TUNE-UP PROCEDURES

- This section describes the servicing procedures for each item of the Periodic Maintenance requirements.

AIR CLEANER

Clean every 3 000 km (1 800 miles).

- Remove the front trunk box cover. (☞7-16)
- Remove the air cleaner cover ①.

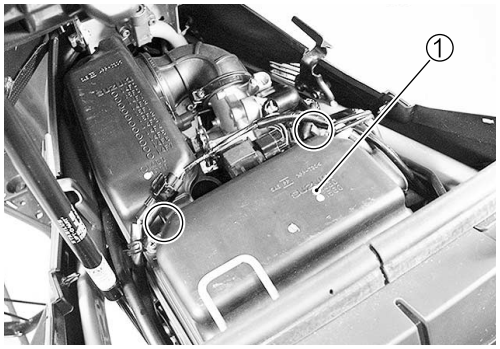

- Remove the air cleaner element ②.

NOTE:

** When installing the air cleaner element, the letter mark on the element should be positioned outside.*

** When installing the air cleaner element retainer ③, the long side Ⓐ of the retainer flange should be positioned forward.*

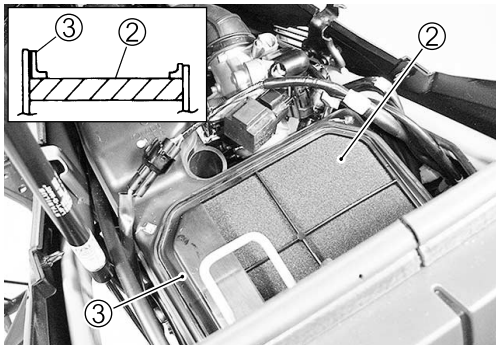

- Fill a washing pan of a proper size with a non-flammable cleaning solvent ④. Immerse the element in the cleaning solvent and wash it.
- Gently squeeze the element to remove the excess solvent: do not twist or wring the element or it will develop tears.
- Immerse the element in motor oil ⑤ and squeeze out the excess oil. The element should be wet but not dripping.
- Reinstall the cleaned or new air cleaner element in the reverse order of removal.

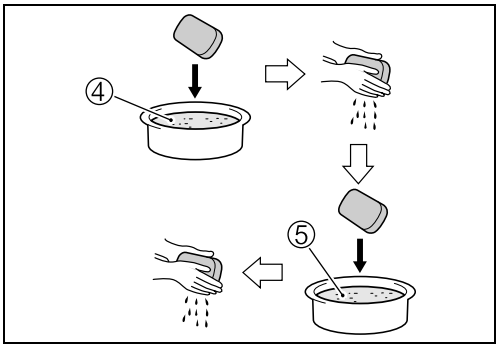

CAUTION

*** Inspect the air cleaner element for tears. A torn element must be replaced.**

*** If driving under dusty conditions, clean the air cleaner element more frequently. The surest way to accelerate engine wear is to use the engine without the element or to use a torn element. Make sure that the air cleaner is in good condition at all times. Life of the engine depends largely on this component!**

EXHAUST PIPE BOLT AND MUFFLER BOLT

Tighten initially at 1 000 km (600 miles, 1 months) and every 6 000 km (4 000 miles, 6 months) thereafter.

- Remove the under cover. (☞7-14)
- Tighten the exhaust pipe bolts ①, exhaust pipe joint nuts ② and muffler mounting nut ③ to the specified torque with a torque wrench.

Exhaust pipe bolt: 23 N·m (2.3 kgf-m, 16.5 lb-ft)
Exhaust pipe joint nut: 30 N·m (3.0 kgf-m, 21.5 lb-ft)
Muffler mounting nut: 23 N·m (2.3 kgf-m, 16.5 lb-ft)

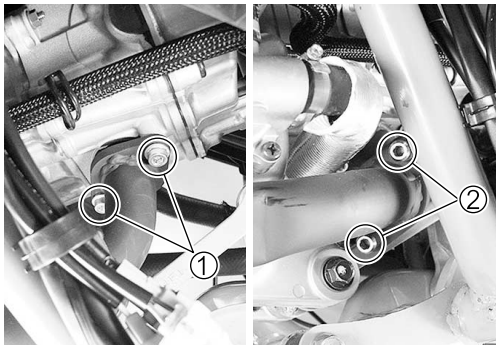

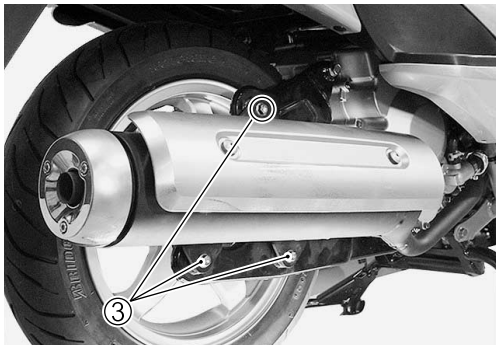

VALVE CLEARANCE

Inspect initially at 1 000 km (600 miles, 1 months) and every 6 000 km (4 000 miles, 6 months) thereafter.

- Remove the trunk box. (☞7-18)
- Remove the air cleaner box and throttle body. (☞5-14)
- Remove the cooling fan cover. (☞3-11)
- Remove the cooling fan filter. (☞3-11)

- Remove the cylinder head cover ①.

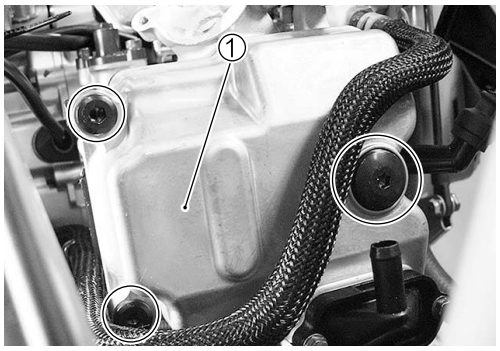

- The valve clearance specification is different for intake and exhaust valves. Valve clearance adjustment must be checked and adjusted, 1) at the time of periodic inspection, 2) when the valve mechanism is serviced, and 3) when the camshaft is disturbed by removing it for servicing.

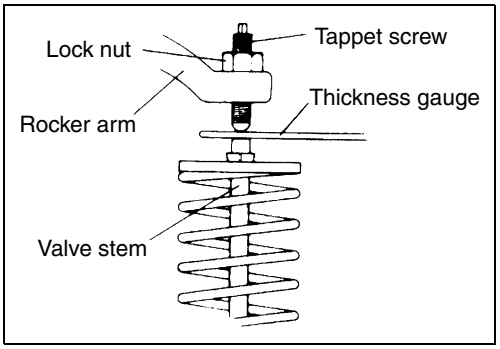

DATA **Valve clearance (When cold):**
Standard: IN.: 0.08 – 0.13 mm (0.003 – 0.005 in)
EX.: 0.17 – 0.22 mm (0.007 – 0.009 in)

NOTE:
** The piston must be at (TDC) on the compression stroke in order to check the valve clearance or to adjust valve clearance.*
** The clearance specification is for COLD state.*
** To turn the crankshaft for clearance checking, and rotate in the normal running direction. The spark plug should be removed.*

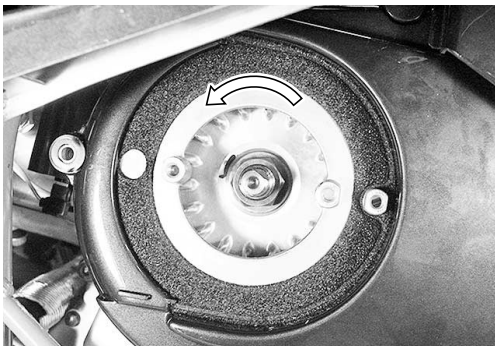

- Turn crankshaft to bring the "TDC" line Ⓐ on the rotor to the index mark Ⓑ on the generator stator case.
- Check that the engrave line Ⓒ locates parallel with the mating face between the cylinder head cover when viewed from the side.

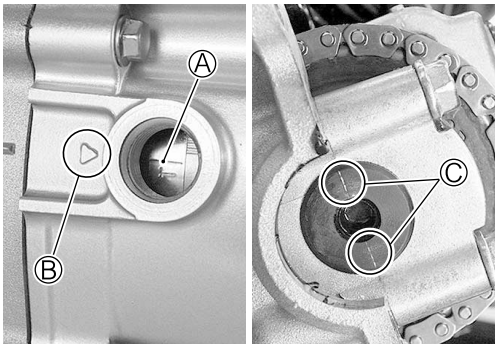

- Insert a thickness gauge between the valve stem end and the adjusting screw on the rocker arm.
- If the clearance is out of specification, bring it into the specified range.

TOOL **09900-20806: Thickness gauge**
09917-14920: Valve clearance adjusting driver

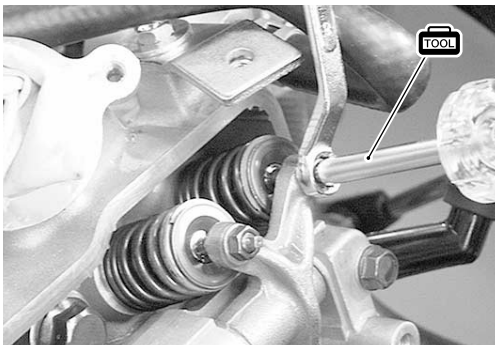

SPARK PLUG

Inspect at 6 000 km (4 000 miles, 6 months) and replace every 12 000 km (7 000 miles, 12 months) thereafter.

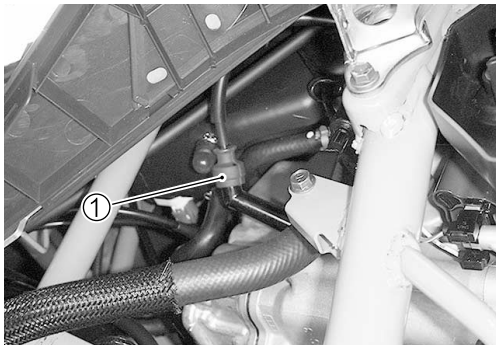

REMOVAL

- Remove the left side leg shield. (☞7-15)
- Disconnect the spark plug cap ① and remove the spark plug.

TOOL 09930-10121: Spark plug socket wrench set

	Hot type	Standerd	Cold type
NGK	CR6E	CR7E	CR8E
ND	U20ESR-N	U22ESR-N	U24ESR-N

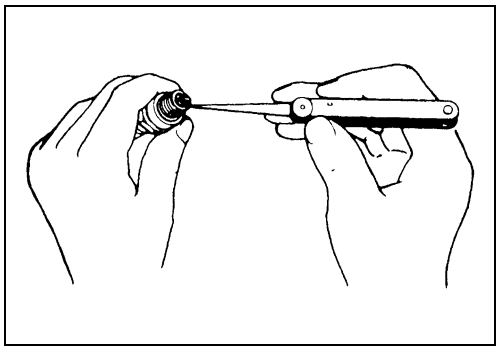

CARBON DEPOSIT

- Inspect to see the carbon deposit on the plug.
- If the carbon is deposited, remove it with a spark plug cleaner machine or carefully using a tool with a pointed end.

SPARK PLUG GAP

- Measure the plug gap with a thickness gauge if it is correct. If not, adjust it to the following gap.

DATA Spark plug gap: Standard: 0.7 – 0.8 mm (0.028 – 0.031 in)

TOOL 09900-20803: Thickness gauge

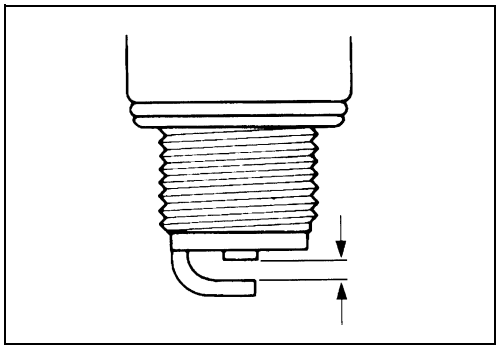

ELECTRODE'S CONDITION

- Inspect to see the worn or burnt condition of the electrodes. If it is extremely worn or burnt, replace the plug. And also replace the plug if it has a broken insulator, damaged thread, etc.

CAUTION

Confirm the thread size and reach when replacing the plug. If the reach is too short, carbon will be deposited on the screw portion of the plug hole and engine damage may result.

REMOUNTING

CAUTION

Before using a spark plug wrench, carefeuuly turn the spark plug by finger into the threads of the cylinder head to prevent damage the aluminum threads.

- Install the spark plug to the cylinder head by finger tight, and then tighten it to the specified torque.

Spark plug: 11 N·m (1.1 kgf-m, 8.0 lb-ft)

FUEL LINE

Inspect initially at 6 000 km (4 000 miles, 6 months). Replace every 4 years.

- Inspect the fuel hose ① for damage and fuel leakage. If any defects are found, the fuel hose must be replaced.

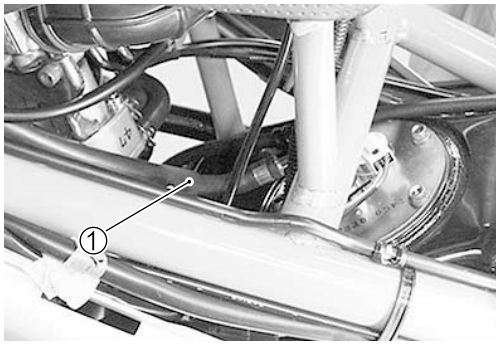

ENGINE OIL AND OIL FILTER

(ENGINE OIL)
Replace initially at 1 000 km (600 miles, 1 months) and every 6 000 km (4 000 miles, 6 months) thereafter.

(OIL FILTER)
Replace initially at 1 000 km (600 miles, 1 months) and every 18 000 km (11 000 miles, 18 months) threafter.

- Oil should be changed while the engine is warm. Oil filter replacement at the above intervals, should be done together with the engine oil change.

ENGINE OIL REPLACEMENT

- Keep the motorcycle upright with the center stand.
- Place an oil pan below the engine, and drain the oil by removing the filler cap ① and oil drain plug ②.

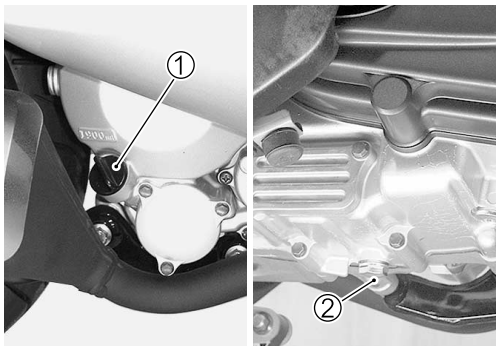

- Fit the oil drain plug ③ securely, and pour fresh oil through the oil filler. The engine will hold about 2 000 ml of oil. Use an API classification of SF or SG oil with SAE 10W-40 viscosity.

Oil drain plug: 23 N·m (2.3 kgf-m, 16.5 lb-ft)

- Install the filler cap.
- Place the motorcycle on the center stand.
- Start up the engine and allow it to run for several minutes at idling speed.

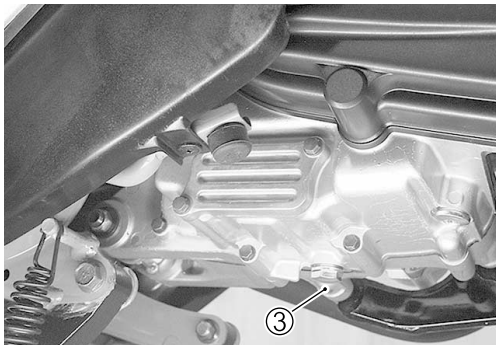

- Turn off the engine and wait about one minute, then check the oil level by removing the filler cap ④. If the level is below mark "L", add oil to "F" level.

If the level is above mark "F", drain oil to "F" level.

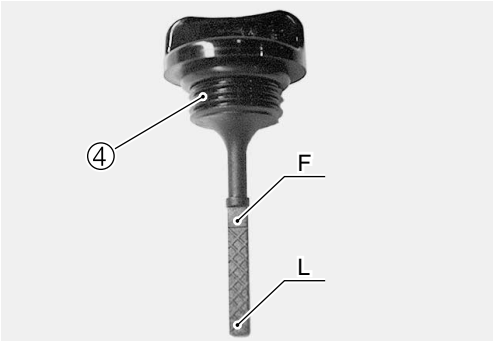

OIL FILTER REPLACEMENT

- Drain engine oil in the same manner of engine oil replacement procedure.
- Remove the oil filter cap ①.
- Remove the oil filter.

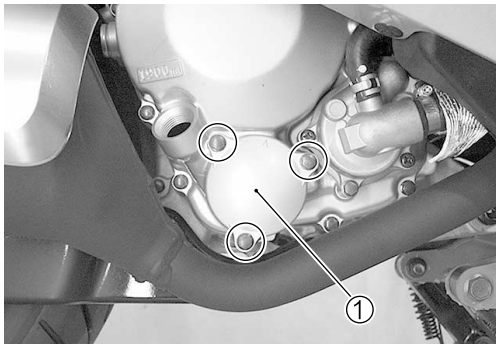

- Install the new O-ring ② and new oil filter.

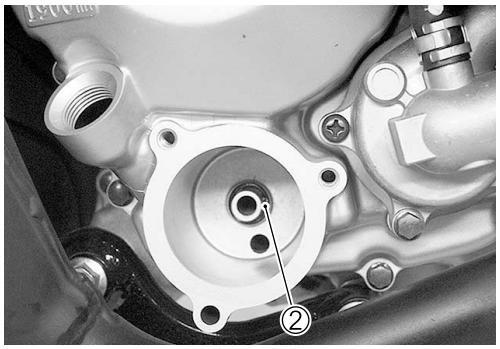

- Install the new O-ring ③ and spring ④ to the oil filter cap.

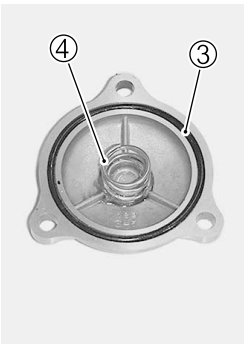

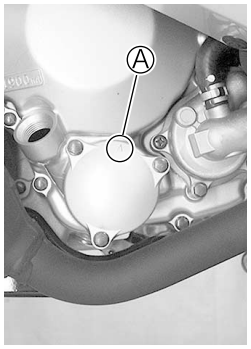

NOTE:

** Before installing the oil filter cap, apply engine oil lightly to the new O-ring ③.*

** The triangle mark Ⓐ on the oil filter cap should be positioned topward.*

Oil filter cap bolt: 10 N·m (1.0 kgf-m, 7.0 lb-ft)

Engine oil capacity
Oil change: Approx.1 900 ml (64.22/66.90 US/Imp oz)
Filter change: Approx.2 000 ml (67.60/70.42 US/Imp oz)
Overhaul engine: Approx.2 300 ml (77.74/80.98 US/Imp oz)

FINAL GEAR OIL

Replace every 12 000 km (7 500 miles, 12 months) thereafter.

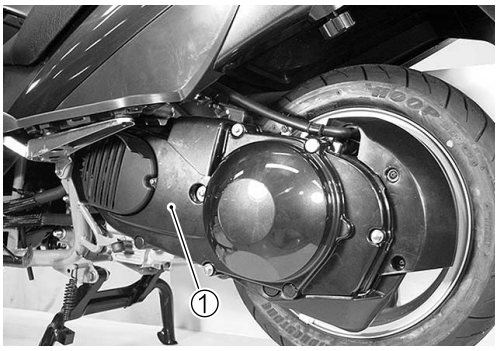

TRANSMISSION OIL REPLACEMEMT

- Keep the motorcycle upright with the center stand.
- Remove the left side leg shield. (☞7-15)
- Remove the clutch cover ①. (☞3-16)
- Place an oil pan below the mission case.

- Remove the oil level plug ② and inspect the oil level. If the level is below the level hole, add oil until oil flows from the level hole.

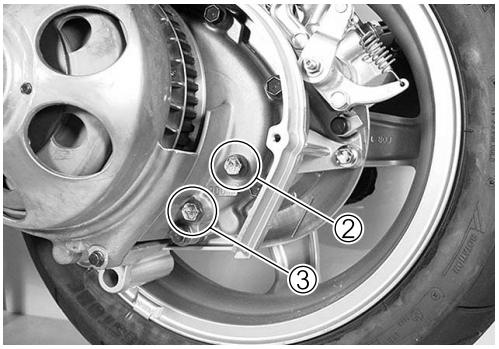

Oil viscosity and classification
:SAE 10 W-40 with SF or SG

- Tighten the oil level plug ② to the specified torque.

Oil level plug: 12 N·m (1.2 kgf-m, 8.5 lb-ft)

NOTE:

If oil is dirty with sludge or used for a long period, drain the oil by removing the oil drain plug ③ and pour fresh oil through the oil level hole.

Oil drain plug: 12 N·m (1.2 kgf-m, 8.5 lb-ft)

NECESSARY AMOUNT OF FINAL GEAR OIL
Oil change: Approx.190 ml (6.42/6.69 US/Imp oz)
Overhaul: Approx.200 ml (6.76/7.04 US/Imp oz)

IDLE SPEED

Inspect initially at 1 000 km (600 miles, 1 months) and every 6 000 km (4 000 miles, 6 months) thereafter.

NOTE:
Make this adjustment when the engine is hot.

- Remove the front trunk box cover. (☞7-16)
- Remove the left side leg shield. (☞7-15)
- Connect an electric tachometer.
- Start up the engine and set its speed at anywhere between 1400 and 1600 r/min by turning idle adjust screw ①.

DATA Engine idle speed: Standard : 1400 ± 100 r/min

TOOL 09900-26006: Tachometer

THROTTLE CABLE PLAY

Inspect initially at 1 000 km (600 miles, 1 months) and every 6 000 km (4 000 miles, 6 months) thereafter.

Adjust the throttle cable play Ⓐ with the following three steps.

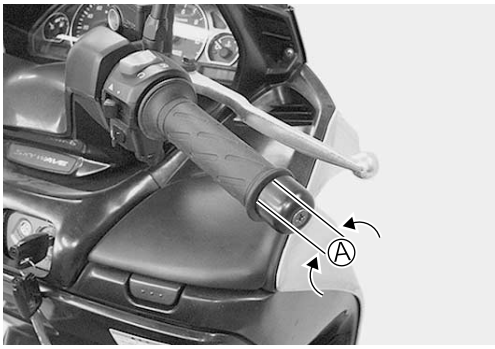

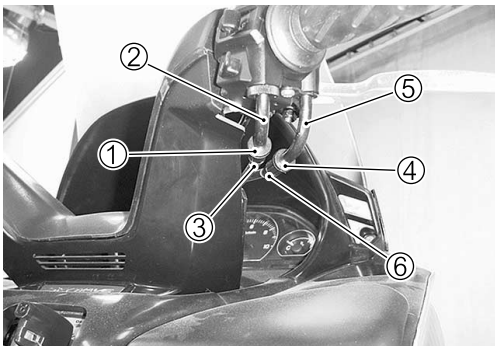

First step:
- Loosen the lock nut ① of the throttle returning cable ② and turn in the adjuster ③ fully into the threads.

Second step:
- Loosen the lock nut ④ of the throttle pulling cable ⑤.
- Turn the adjuster ⑥ in or out until the throttle cable play Ⓐ should be 2.0 – 4.0 mm (0.08 – 0.16 in) at the throttle grip.
- Tighten the lock nut ④ while holding the adjuster ⑥.

Third step:
- While holding the throttle grip at the fully closed position, slowly turn out the adjuster ③ of the throttle returning cable ② to feel resistance.
- Tighten the lock nut ① while holding the adjuster ③.

DATA **Throttle cable play Ⓐ: 2.0 – 4.0 mm (0.08 – 0.16 in)**

⚠ WARNING

After the adjustment is completed, check that handlebar movement does not raise the engine idle speed and that the throttle grip returns smoothly and automatically.

COOLING FAN FILTER

Clean every 3 000 km (1 800 miles).

- Remove the left side leg shield. (☞7-15)
- Remove the cooling fan cover ①.

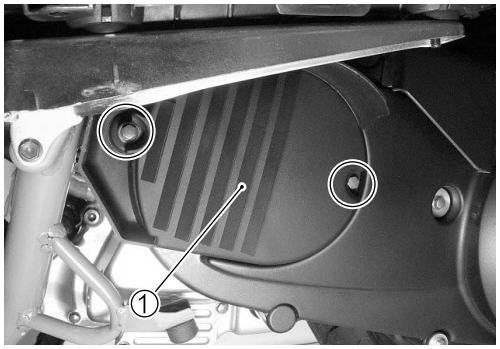

- Remove the cooling fan filter ②.
- Clean the fan filter.
- Reinstall the cleaned or new filter in the reverse order of removal.

CAUTION

Do not apply oil or water to the fan filter.

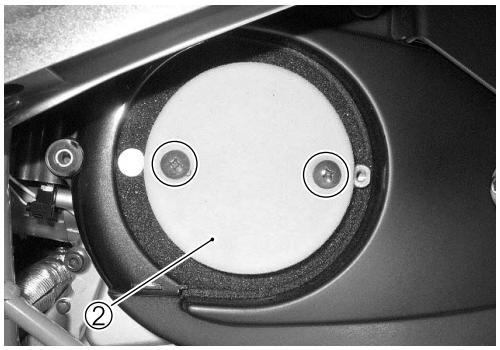

COOLING SYSTEM

(RADIATOR HOSE)
Inspect every 6 000 km (4 000 miles, 6 months).
Replace radiator hoses every 4 years.

(ENGINE COOLANT)
Replace engine coolant every 2 years.

RADIATOR HOSES

Check to see the radiator hoses for crack, damage or engine coolant leakage.
If any defects are found, replace the radiator hoses with new ones.

ENGINE COOLANT LEVEL CHECK

- Keep the motorcycle upright.
- Check the engine coolant level by observing the full and lower lines on the engine coolant reserve tank.
  Ⓕ Full line Ⓛ Lower line
- If the level is below the lower line, remove the filler cap ① and add engine coolant to the full line from the engine coolant reserve tank filler.

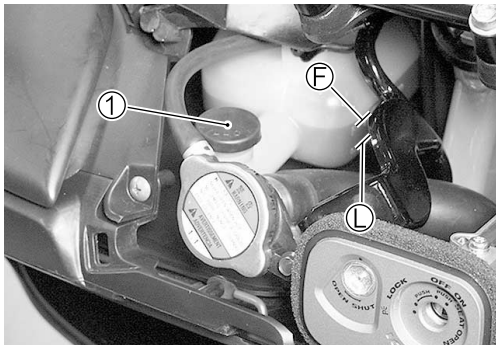

ENGINE COOLANT CHANGE

- Remove the left side leg shield. (☞7-15)
- Remove the radiator cap ①.

- Drain engine coolant by disconnecting the water hoses ② and ③.

⚠ WARNING

- **Do not open the radiator cap when the engine is hot, as you may be injured by escaping hot liquid or vapor.**
- **Engine coolant may be harmful if swallowed or if it comes in contact with skin or eyes. If engine coolant gets into the eyes or in contact with the skin, flush thoroughly with plenty of water. If swallowed, induce vomiting and call physician immediately!**

- Flush the radiator with fresh water if necessary.
- Pour the specified engine coolant up to the radiator inlet.
- Bleed the air from the engine coolant circuit as following procedure.

NOTE:
For engine coolant information, refer to page 6-3.

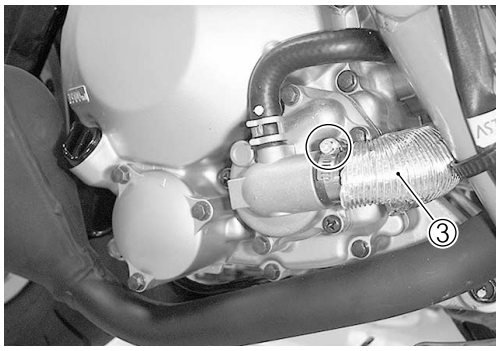

AIR BLEEDING THE ENGINE COOLANT CIRCUIT

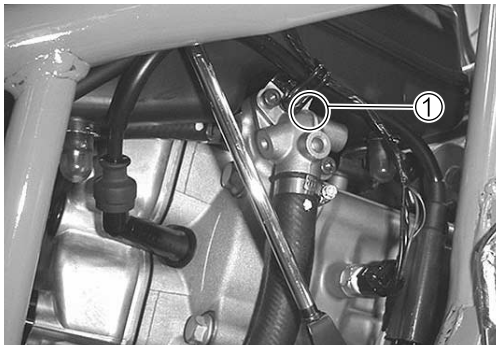

- Bleed air from the air bleeder bolt ①.
- Tighten the air bleeder bolt ① to the specified torque.

Air bleeder bolt: 6 N·m (0.6 kgf-m, 4.3 lb-ft)

- Add engine coolant up to the radiator inlet.
- Slowly swing the motorcycle, right and left, to bleed the air trapped.
- Add engine coolant up to the radiator inlet.
- Start up the engine and bleed air from the radiator inlet completely.
- Add engine coolant up to the radiator inlet.
- Repeat the above procedure until bleed no air from the radiator inlet.
- Close the radiator cap securely.
- After warming up and cooling down the engine several times, add the engine coolant up to the full level of the reserve tank.

CAUTION

Repeat the above procedure several times and make sure that the radiator is filled with engine coolant up to the reserve tank full level.

LLC Engine coolant capacity: Approx.1 300 ml (43.9/45.8 US/Imp oz)

DRIVE V-BELT INSPECTION

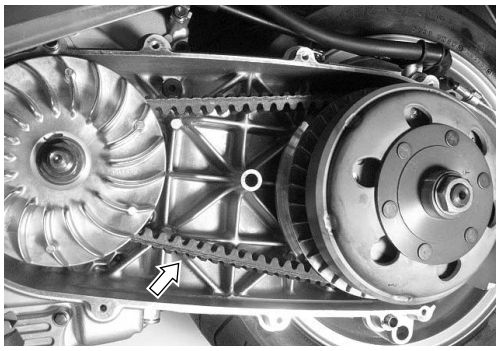

Inspect every 12 000 km (7 500 miles, 12 months).
Replace every 24 000 km (14 500 miles, 24 months)

- Remove the left side leg shield. (☞7-15)
- Remove the clutch cover. (☞3-16)
- Remove the clutch inner cover. (☞3-16)
- Check the contact surface for crack or other damage.
- Measure the width of the belt if necessary. (☞3-55)
- If any abnormal point are found, replace it with a new one.

PAIR(AIR SUPPLY)SYSTEM

Inspect every 12 000 km (7 500 miles, 12 months).

- Inspect the PAIR (air supply) system periodically. (☞10-6)

BRAKE SYSTEM

(BRAKE)
Inspect initially at 1 000 km (600 miles, 1 months) and every 6 000 km (4 000 miles, 6 months) thereafter.

(BRAKE HOSE AND BRAKE FLUID)
Inspect every 6 000 km (4 000 miles, 6 months). Replace hoses every 4 years. Replace fluid every 2 years.

BRAKE FLUID LEVEL CHECK

- Keep the motorcycle upright and place the handlebars straight.
- Check the brake fluid level by observing the lower limit lines on the front and combination brake fluid reservoirs.
- When the level is below the lower limit line, replenish with brake fluid that meets the following specification.

Specification and Classification: DOT 4

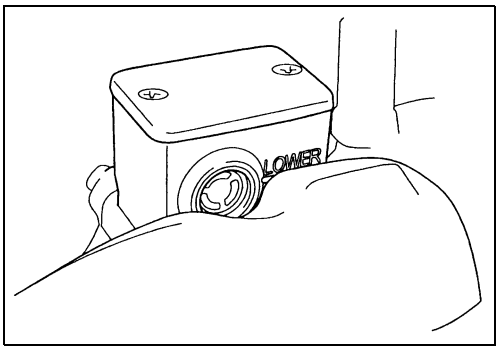

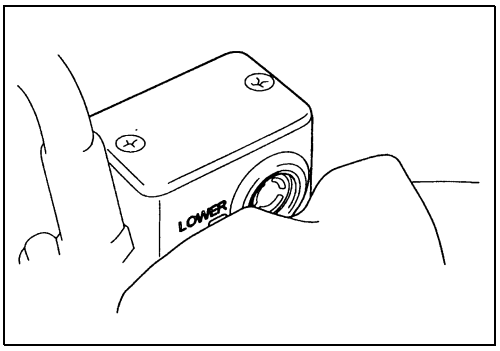

WARNING

The brake system of this motorcycle is filled with a glycol-based brake fluid. Do not use or mix different types of fluid such as silicone-based or petroleum-based. Do not use any brake fluid taken from old, used or unsealed containers. Never reuse brake fluid left over from the last servicing or stored for a long period.

WARNING

Brake fluid, if it leaks, will interfere with safe running and immediately discolor painted surfaces.Check the brake hoses and hose joints for cracks and oil leakage before riding.

BRAKE PAD WEAR

- The extent of brake pad wear can be checked by observing the grooved limit Ⓐ on the pad. When the wear exceeds the grooved limit, replace the pads with new ones.

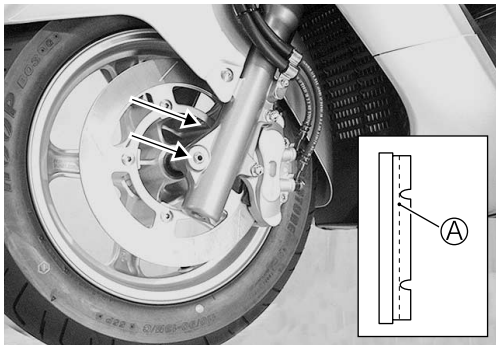

CAUTION

Replace the brake pad as a set, otherwise braking performance will be adversely affected.

- Remove the rear brake caliper cover ①.

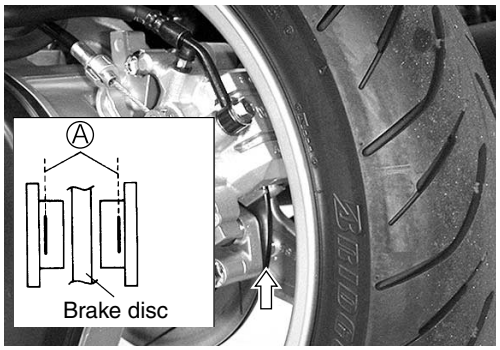

BRAKE PAD REPLACEMENT

- Front brake pad. (☞7-26)
- Rear brake pad. (☞7-52)

FRONT BRAKE FLUID REPLACEMENT

- Place the motorcycle on a level surface and keep the handlebar straight.
- Remove the master cylinder reservoir cap and diaphragm.
- Suck up the old brake fluid as much as possible.
- Fill the reservoir with new brake fluid.

BF **Specification and classification: DOT4**

- Connect a clear hose ① to the air bleeder valve and insert the other end of the hose into a receptacle.

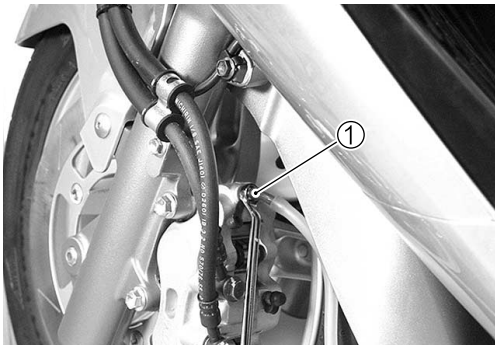

- Loosen the air bleeder valve and pump the brake lever until the old brake fluid is completely out of the brake system.
- Close the air bleeder valve and disconnect the clear hose. Fill the reservoir with new brake fluid to the upper end of the inspection window.

Air bleeder valve: 7.5 N·m (0.75 kgf-m, 5.5 lb-ft)

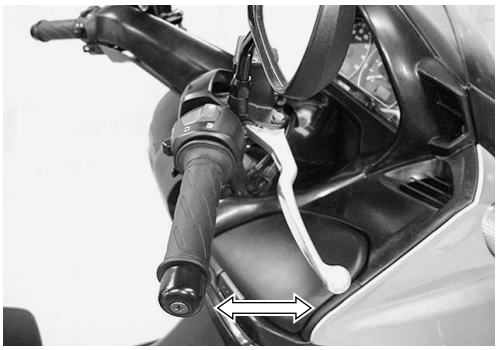

COMBINATION BRAKE FLUID REPLACEMENT

- Place the motorcycle on a level surface and keep the handlebar straight.
- Remove the rear brake caliper cover ①.
- Remove the master cylinder reservoir cap and diaphragm.
- Suck up the old brake fluid as much as possible.
- Fill the reservoir with new brake fluid.

Specification and classification: DOT4

- Connect a clear hose ① to the air bleeder valve and insert the other end of the hose into a receptacle.
- Loosen the air bleeder valve and pump the brake lever until the old brake fluid is completely out of the brake system.
- Close the air bleeder valve and disconnect the clear hose. Fill the reservoir with new brake fluid to the upper end of the inspection window.

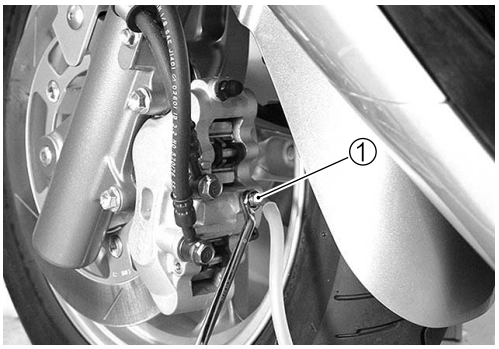

- Next, connect a clear hose ② to the air bleeder valve on the rear brake caliper. The rear brake fluid replacement is the same way as that of the front one.

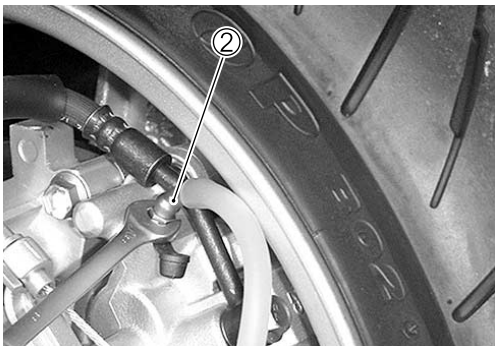

AIR BLEEDING THE BRAKE FLUID CIRCUIT

- Air trapped in the fluid circuit acts like a cushion to absorb a large proportion of the pressure developed by the master cylinder and thus interferes with the full braking performance of the brake caliper. The presence of air is indicated by “sponginess” of the blake lever and also by lack of braking force. Considering the danger to which such trapped air exposes the machine and rider, it is essential that, after remounting the brake and restoring the brake system to the normal condition, the brake fluid circuit be purged of air in the following manner:

- Fill up the master cylinder reservoir to the “UPPER” line Ⓐ. Place the reservoir cap to prevent entry of dirt.

- Connect a clear hose ① to the air bleeder valve, and insert the free end of the pipe into a receptacle.

Air bleeder valve: 7.5 N·m (0.75 kgf-m, 5.5 lb-ft)

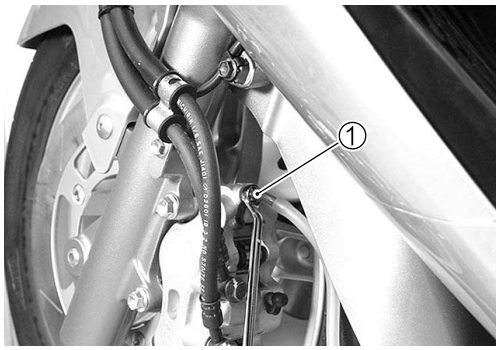

- Front brake: Bleed the air from the air bleeder valve.
- Squeeze and release the brake lever several times in rapid succession and squeeze the lever fully without releasing it. Loosen the bleeder valve by turning it a quarter of a turn so that the brake fluid runs into the receptacle; this will remove the tension of the brake lever causing it to touch the handlebar grip. Then, close the valve, pump and squeeze the lever, and open the velve.
- Repeat this process until the fluid flowing into the receptacle no longer contains air bubbles.

NOTE:
Replenish the brake fluid in the reservoir as necessary while bleeding the brake system. Make sure that there is always some fluid visible in the reservoir.

- Close the bleeder valve, and disconnect the clear hose.
- Fill the reservoir with brake fluid to the “UPPER” line.

CAUTION

Handle brake fluid with care: the fluid reacts chemically with paint, plastics, rubber materials and so on.

AIR BLEEDING FOR THE COMBINATION BRAKE

- The combination brake system air bleeding is the same manner as that of the front brake one.
- Remove the rear brake caliper cover ①.

- Bleed the air from the rear side first and then the front side.

② Clear hose for rear brake
③ Clear hose for front brake

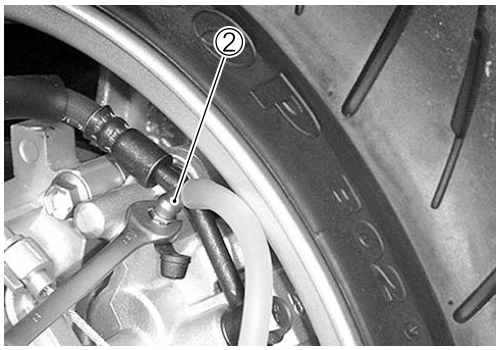

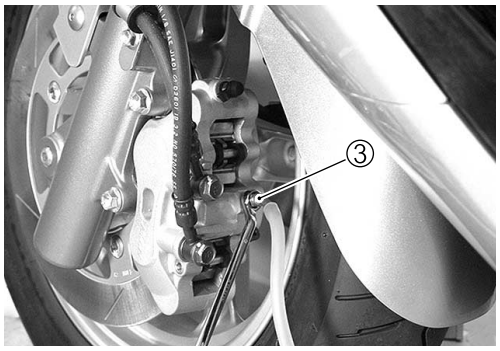

STEERING

Inspect initially at 1 000 km (600 miles, 1 months) and every 12 000 km (7 500 miles, 12 months) thereafter.

- Steering should be adjusted properly for smooth turning of handlebars and safe running. Overtight steering prevents smooth turning of the handlebars and too loose steering will cause poor stability.

- Check that there is no play in the steering stem while grasping the lower fork tubes by supporting the machine so that the front wheel is off the ground, with the wheel straight ahead, and pull forward. If play is found, perform steering bearing adjustment as described in page 7-46 of this manual.

FRONT FORK

Inspect every 12 000 km (7 500 miles, 12 months).

- Inspect the front forks for oil leakage, scoring or scratches on the outer surface of the inner tubes. Replace any defective parts, if necessary. (☞7-35)

REAR SUSPENSION

Inspect every 12 000 km (7 500 miles, 12 months).

- Inspect the rear shock absorber for oil leakage and mounting rubbers including engine mounting for wear and damage. Replace any defective parts, if necessary.

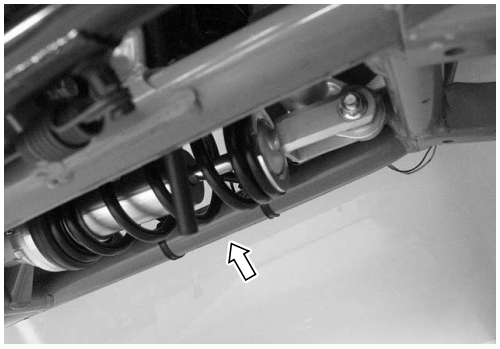

REAR SHOCK ABSORBER ADJUSTMENT

- Turn the adjuster handle, adjust the rear shock absorber spring pre-load.

DATA **Rear shock absorber spring pre-load:**
Adjustable range : 17 turns (34 clicks)
Standard position : 2-1/2 turns (9clicks) out from most softest position

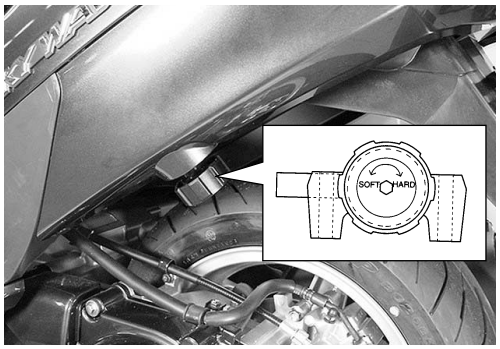

TIRE

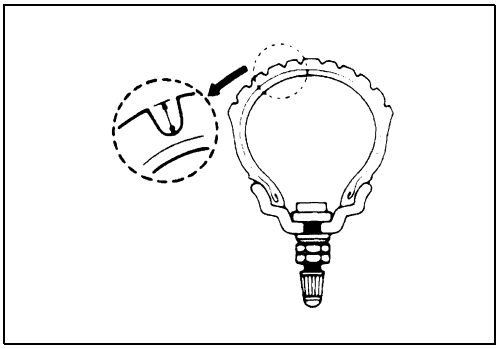

Inspect initially at 1 000 km (600 miles, 1 months) and every 6 000 km (4 000 miles, 6 months) thereafter.

TIRE TREAD CONDITION

- Operating the motorcycle with excessively worn tire will decrease riding stability and consequently invite a dangerous situation. It is highly recommended to replace a tire when the remaining depth of tire tread reaches the following specification.

TOOL 09900-20805: Tire depth gauge

DATA Tire tread depth
Service Limit (FRONT) : 1.6 mm (0.06 in)
(REAR) : 2.0 mm (0.08 in)

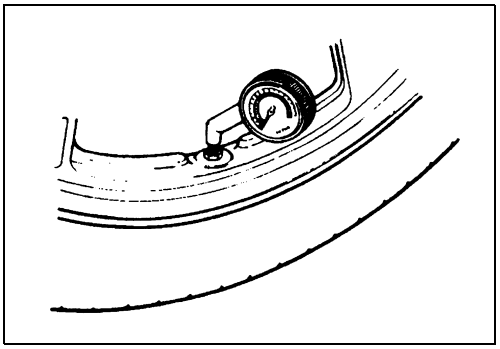

TIRE PRESSURE

- If the tire pressure is too high or too low, steering will be adversely affected and tire wear increased. Therefore, maintain the correct tire pressure for good roadability or shorter tire life will result. Cold inflation tire pressure is as follows.

COLD INFLATION TIRE PRESSURE	SOLD RIDING			DUAL RIDING		
	kPa	kgf/cm²	psi	kPa	kgf/cm²	psi
FRONT	175	1.75	25	175	1.75	25
REAR	200	2.00	28	280	2.80	40

CAUTION

The standard tire fitted on this motorcycle is 110/90-13 M/C 55P for front and 130/70-13 M/C 63 P for rear. The use of tires other than those specified may cause instability. It is highly recommended to use a SUZUKI Genuine Tire.

TIRE TYPE

BRIDGESTONE (Front: HOOP B03, Rear: HOOP B02)

CHASSIS BOLT AND NUT

Tighten initially at 1 000 km (600 miles, 1 months) and every 6 000 km (4 000 miles, 6 months) thereafter.

- Check that all chassis bolts and nuts are tightened to their specified torque.(Refer to pages 2-24 for the locations of the following nuts and bolts on the motorcycle.)

No.	Item	N·m	kgf-m	lb-ft
①	Front axle	65	6.5	47.0
②	Pinch bolt	23	2.3	16.5
③	Lock nut	30	3.0	21.5
④	Handlebar holder clamp bolt	55	5.5	40.0
⑤	Handlebar holder set bolt	23	2.3	16.5
⑥	Handlebar clamp bolt	23	2.3	16.5
⑦	Front fork cap bolt	45	4.5	32.5
⑧	Front fork clamp bolt	23	2.3	16.5
⑨	Master cylinder bolt	10	1.0	7.0
⑩	Union bolt	23	2.3	16.5
⑪	Caliper mounting bolt	25	2.5	18.0
⑫	Air bleeder valve	7.5	0.75	5.5
⑬	Brake disc bolt	23	2.3	16.5
⑭	Rear axle nut	120	12.0	87.0
⑮	Rear wheel nut	50	5.0	36.0
⑯	Rear shock absorber bolt	50	5.0	36.0
⑰	Cushion lever mounting nut	78	7.8	56.5
⑱	Cushion rod nut	50	5.0	36.0

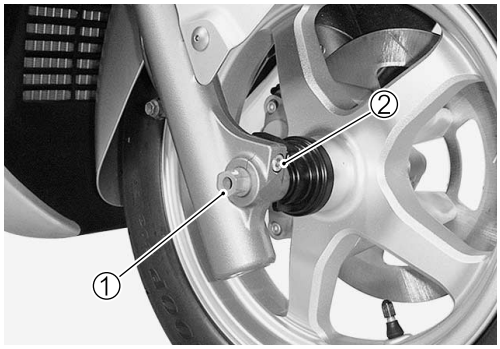
1
2

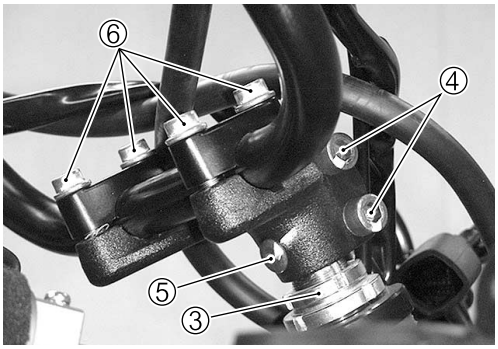
6
4
5
3

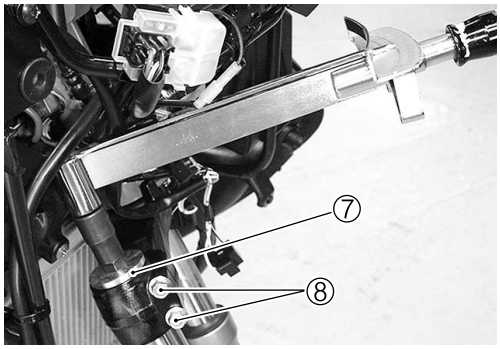
7
8


9


9


10


10

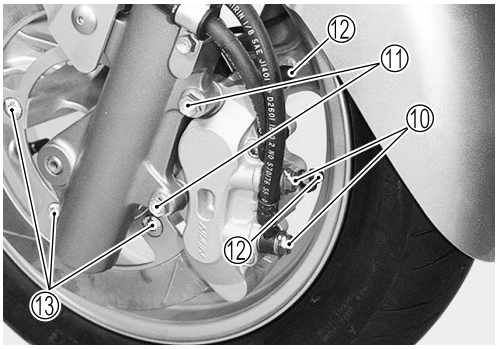
12
11
10
12
13

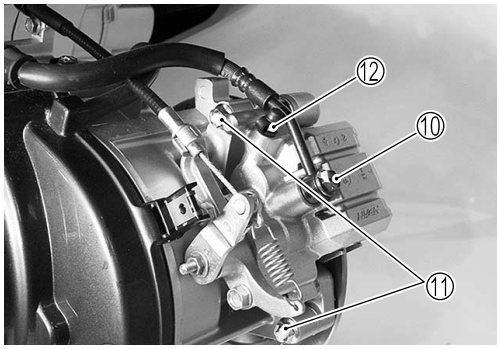
12
10
11


15
14

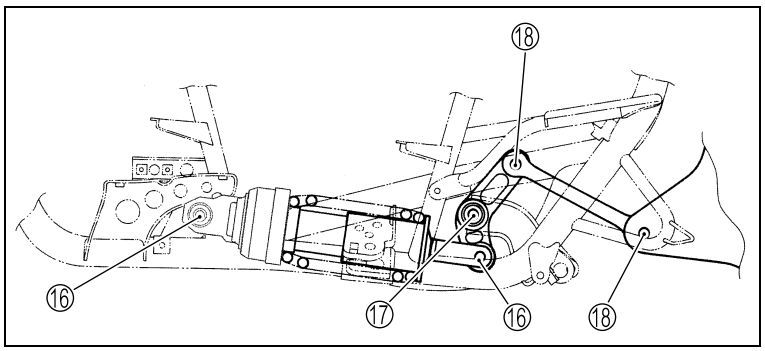
18
16
17
16
18

COMPRESSION PRESSURE CHECK

- The compression of a cylinder is a good indicator of its internal condition.
- The decision to overhaul the cylinder is often based on the results of a compression test. Periodic maintenance records kept at your dealership should include compression readings for each maintenance service.

COMPRESSION PRESSURE SPECIFICATION

Standard	Limit
860 – 900 kPa (8.6 – 9.0 kgf/cm²) (122 – 128 psi)	616 kPa (6.16 kgf/cm²) (88 psi)

Low compression pressure can indicate any of the following conditions:

* Excessively worn cylinder wall
* Worn-down piston or piston rings
* Piston rings stuck in grooves
* Poor seating of valves
* Ruptured or otherwise defective cylinder head gasket

COMPRESSION TEST PROCEDURE

NOTE:

* *Before testing the engine for compression pressure, make sure that the cylinder head bolts are tightened to the specified torque values and valves are properly adjusted.*
* *Have the engine warmed up by idling before testing.*
* *Be sure that the battery used is in fully-charged condition.*

- Remove the parts concerned and test the compression pressure in the following manner.
- Support the motorcycle with the center stand.
- Remove the left side leg shield. (☞7-15)
- Remove the spark plug. (☞2-7)
- Fit the compression gauge in the plug hole, while taking care that the connection tight.
- Keep the throttle grip in full-open position.
- While cranking the engine a few seconds with the starter, and record the maximum gauge reading as the compression of that cylinder.

TOOL **09915-64512: Compression gauge**
09915-63310: Compression gauge adaptor

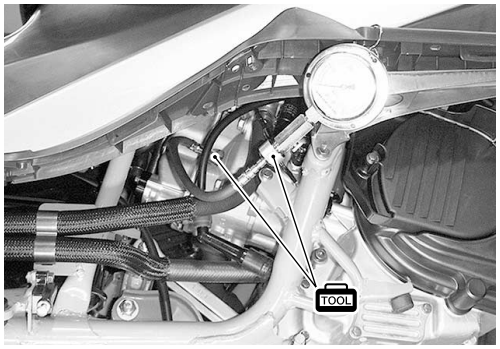

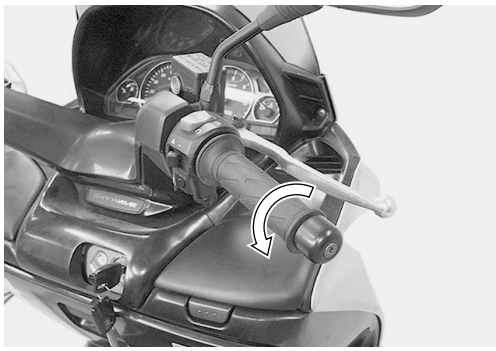

OIL PRESSURE CHECK

- Check the oil pressure periodically. This will give a good indication of the condition of the moving parts.

OIL PRESSURE SPECIFICATION

Above 80 kPa (0.8 kg/cm², 11 psi) **Below 160 kPa (1.6 kg/cm², 23 psi)**	**at 3 000 r/min., Oil temp. at 60 °C (140 °F)**

- If the oil pressure is lower or higher than the specification, the following causes may be considered.

LOW OIL PRESSURE

* Clogged oil filter
* Oil leakage from the oil passage
* Damaged O-ring
* Defective oil pump
* Combination of above items

HIGH OIL PRESSURE

* Engine oil viscosity is too high
* Clogged oil passage
* Combination of the above items

OIL PRESSURE TEST PROCEDURE

- Check the oil pressure in the following manner.
- Support the motorcycle with the center stand.
- Remove the main gallery plug ①.
- Install the oil pressure gauge with adaptor in the position shown in the figure.
- Connect the tachometer.
- Warm up the engine as follows:
  Summer 10 min. at 2 000 r/min.
  Winter 20 min. at 2 000 r/min.
- After warming up, increase the engine speed to 3 000 r/min. (with the electric tachometer), and read the oil pressure gauge.

Main gallery plug: 23 N·m (2.3 kgf-m, 16.5 lb-ft)

TOOL 09915-74511: Oil pressure gauge
09900-26006: Tachometer

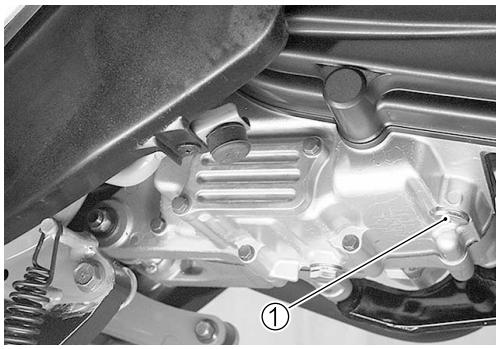

AUTOMATIC CLUTCH INSPECTION

- This motorcycle is equipped with an automatic clutch and variable ratio belt drive transmission. The engagement of the clutch is governed by engine RPMs and centrifugal mechanism located in the clutch.
- To insure proper performance and longer lifetime of the clutch assembly it is essential that the clutch engages smoothly and gradually. The following inspections must be performed:

1.INITIAL ENGAGEMENT INSPECTION

- Warm up the engine to normal operating temperature.
- Remove the left side leg shield. (☞7-15)
- Connect the tachometer to the high-tension cord ①.
- Seated on the motorcycle with the motorcycle on level ground, increase the engine RPMs slowly and note the RPM at which the motorcycle begins to move forward.

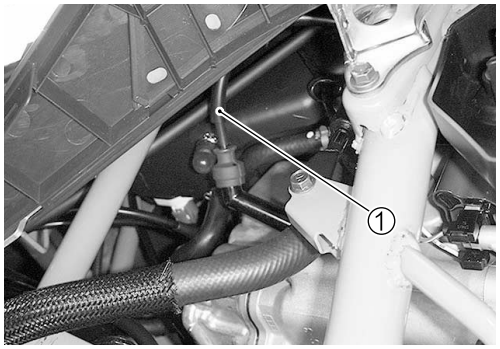

TOOL 09900-26006:Tachometer

DATA Engagement r/min: 2 300 – 2 900 r/min

2.CLUTCH "LOCK-UP" INSPECTION

- Perform this inspection to determine if the clutch is engaging fully and not slipping.
- Apply the front and rear brakes as firm as possible.
- Briefly open the throttle fully and note the maximum engine RPMs sustained during the test cycle.

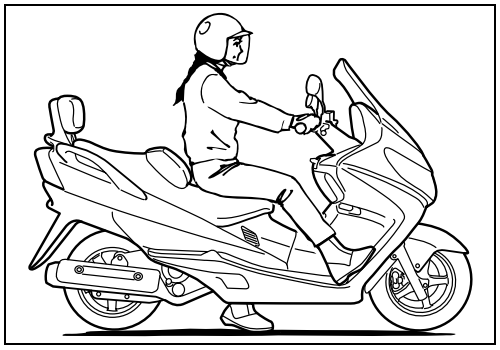

CAUTION

Do not apply full power for more than 3 seconds or damage to the clutch or engine may occur.

DATA Lock-up r/min: 3 500 – 4 500 r/min

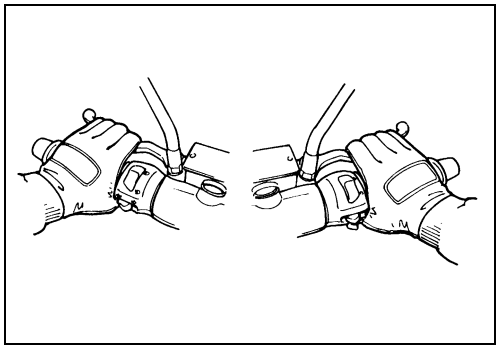

BRAKE-LOCK

INSPECTION

- Inspect that the wheel is locked up when pulling the brake lock lever 2 to 4 notches and moving the motorcycle forward to make sure that the brake-lock acts enough.

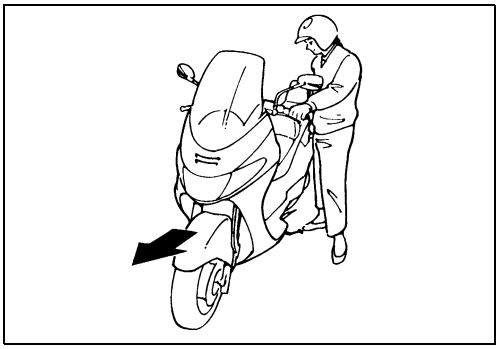

ADJUSTMENT

- Pull the brake-lock lever by one step (one notch).

NOTE:
The brake-lock lever have 8 steps (8 notchs) when pulling in full.

- Remove the rear brake caliper cover ①.

- With the lock nut ② loosening, adjust the adjuster bolt ③ in until the brake pad comes in contact with brake disc.
- Tighten the lock nut ②.

- Return the brake-lock lever to original position and inspect the brake-lock.

CAUTION

After the brake-lock adjustment, inspect the brake fluid level of combination brake.

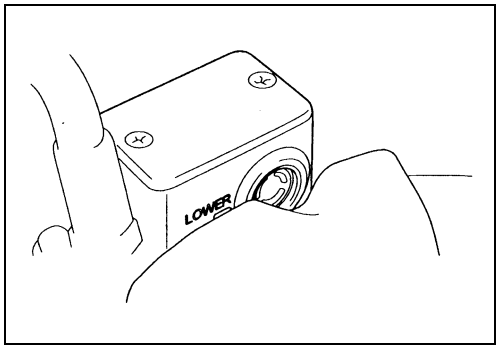

ENGINE

CONTENTS

ENGINE

CONTENTS

ENGINE COMPONENTS REMOVABLE WITH THE ENGINE IN PLACE

Engine components which can be removed while the engine is installed on the chassis are listed below. For the installing and removing procedures, refer to respective paragraphs describing each component.

CENTER OF ENGINE

ITEM	REMOVAL	INSTALLATION
Starter motor	3-10	3-82
Air cleaner	3-4	—
Throttle body	3-5	—
PAIR reed valve	3-23	—
Cylinder head	3-13	3-78
Cam chain tension adjuster	3-12	3-81
Spark plug	3-10	2-7
Cylinder head cover	3-11	3-81
Camshaft	3-13	3-79
Cam sprocket	3-13	3-79
Valve	3-25	3-34
Cylinder	3-14	3-78
Piston	3-14	3-77

LEFT OF ENGINE

ITEM	REMOVAL	INSTALLATION
Fixed drive face	3-17	3-74
Movable drive face	3-17	3-74
Clutch housing	3-17	3-73
Clutch shoe/movable driven face assembly	3-17	3-72
Drive V-belt	3-17	3-72
Transmission cover	3-17	3-72
Oil sump filter	3-18	3-70
Rear axle shaft	3-18	3-71
Idle shaft	3-18	3-71
Driveshaft	3-17, 50	3-72

RIGHT OF ENGINE

ITEM	REMOVAL	INSTALLATION
Muffler	3-6	2-5
Rear wheel	3-6	7-49
Rear brake caliper	3-7	7-58
Generator	3-15	3-75
Oil pump	3-19	3-69
Starter idle gear	3-20	3-68
Balancer driven gear	3-20	3-68
Water pump	3-15	3-75
Oil filter	3-15	3-76

ENGINE REMOVAL AND REMOUNTING

ENGINE REMOVAL

- Remove the trunk box. (☞7-18)
- Remove the front box. (☞7-14)
- Drain the engine oil. (☞2-8)
- Drain the engine coolant. (☞6-3)
- Drain the final gear oil. (☞2-10)

- Disconnect the breather hose ①.

- Remove the IAP sensor coupler ②.
- Disconnect the fuel injector coupler ③.
- Disconnect the ECT sensor/ignition coil coupler ④.

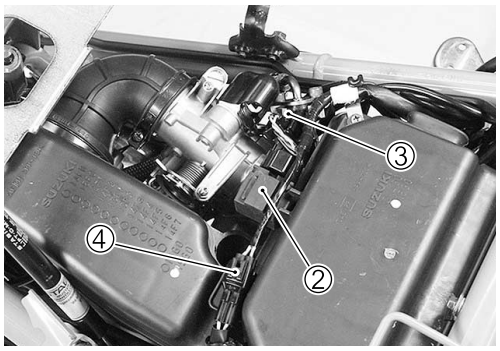

- Disconnect the IAT sensor coupler ⑤.
- Remove the hose ⑥.

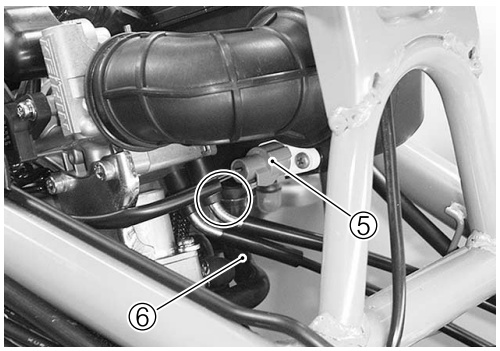

- Loosen the air cleaner hose clamp screw ⑦.
- Remove the air cleaner mounting bolts ⑧.
- Disengage the hooks on the bottom of the air cleaner box and then remove the air cleaner box ⑨.

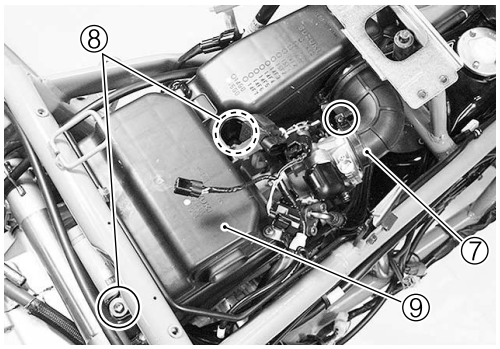

- Remove the PAIR hose ①.

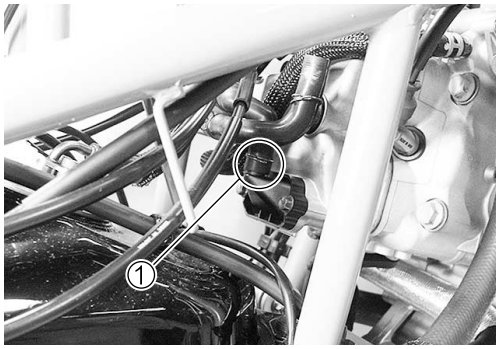

- Remove the intake pipe bolts and then remove the intake pipe ② along with the throttle body ③.
- Remove the O-rings ④ and insulator ⑤.

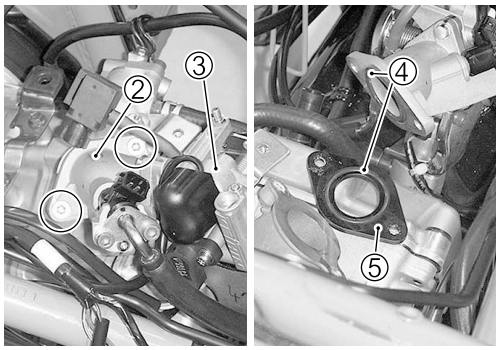

- Disconnect the starter motor lead wire ⑥ and engine ground lead wire ⑦.

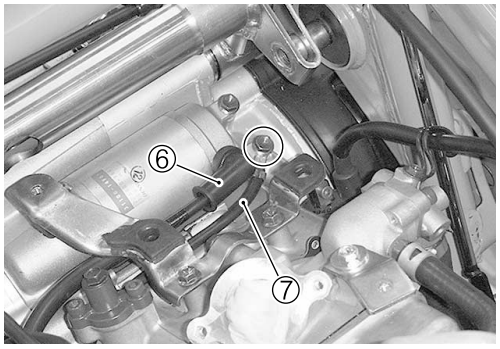

- Disconnect the generator coupler ⑧ and CKP sensor coupler ⑨.

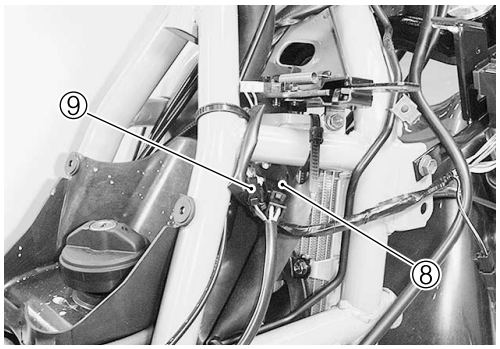

- Disconnect the clamps ⑩, ⑪.

- Remove the water hoses ① and ②.

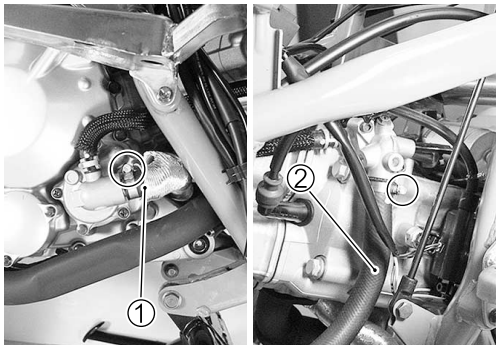

- Remove the exhaust pipe bolts ③.
- Remove the muffler mounting nuts and then remove the muffler ④.
- Remove the gasket.

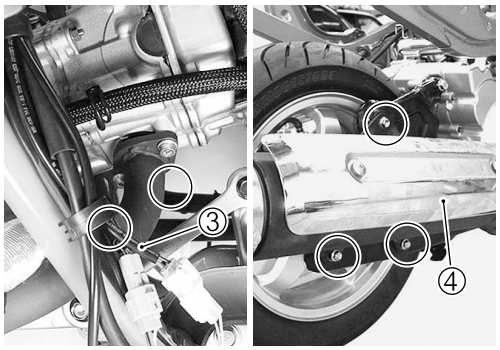

- Remove the muffler bracket ⑤.

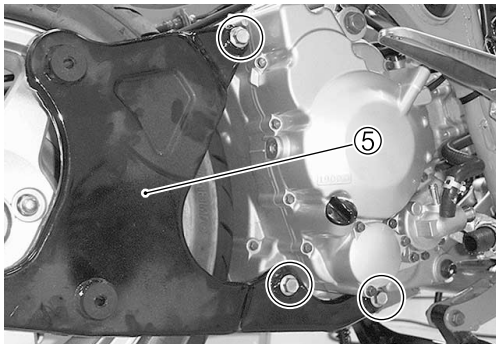

- Remove the rear wheel nuts.
- Remove the rear wheel ⑥.

- Remove the axle nut ⑦.

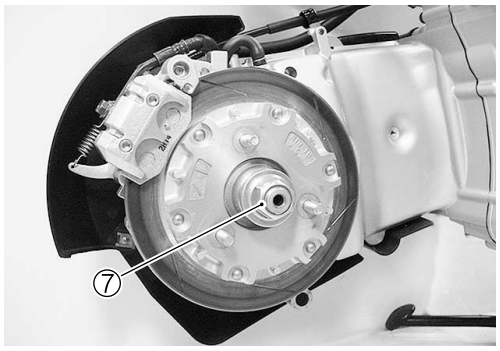

- Remove the rear brake caliper cover ①.

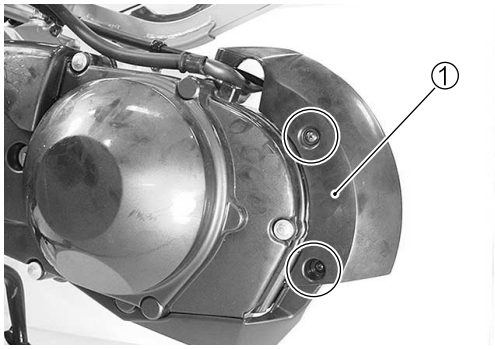

- Remove the rear brake hose clamps ②.
- Remove the rear brake caliper mounting bolts ③.
- Remove the rear brake caliper ④.

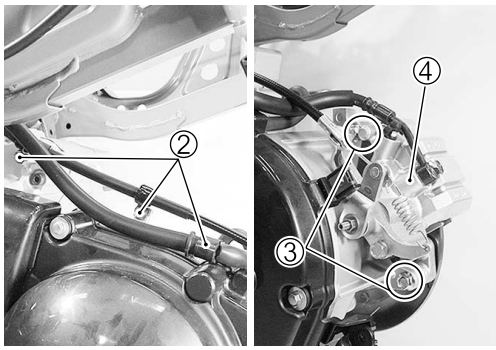

- Remove the rear brake disc ⑤.
- Remove the rear hub ⑥.

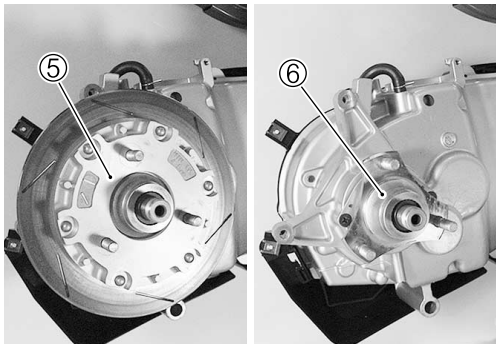

- Support the engine using an engine jack.

- Remove the cushion rod bolt and nut ⑦ located on the front lower part of the engine.
- Remove the engine mounting bolt and nut ⑧.
- Remove the engine from the frame.

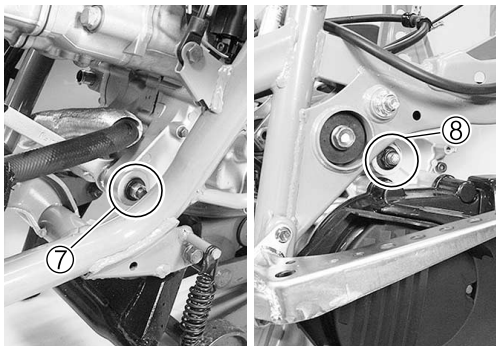

ENGINE REMOUNTING

- Remount the engine assembly in the reverse order of removal.
- Pay attention to the following points:

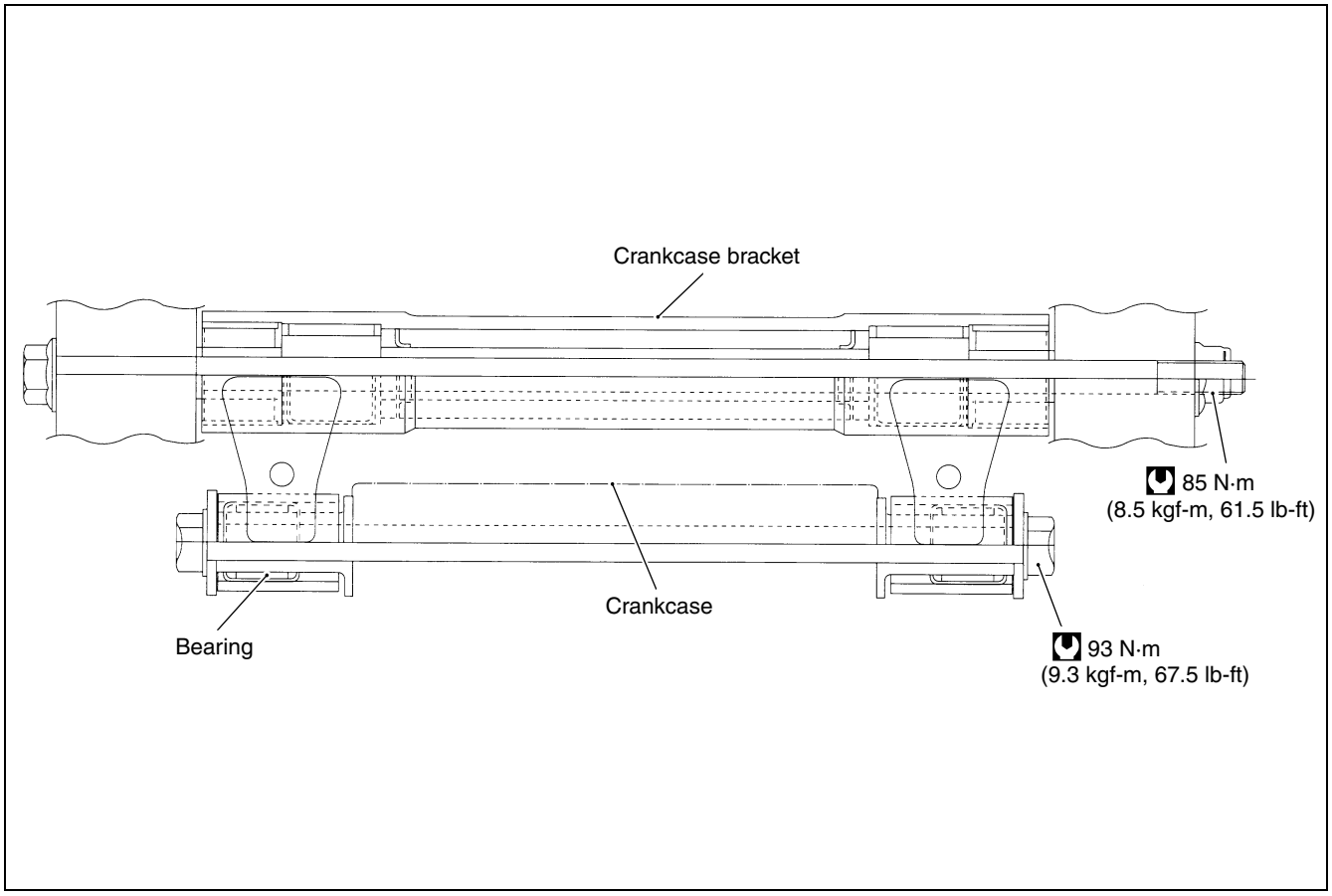

- Install the spacers ① to the crankcase bracket.

NOTE:
Apply SUZUKI SUPER GREASE to the spacers and needle roller bearings.

99000-25010: SUZUKI SUPER GREASE "A" (Others)
99000-25030: SUZUKI SUPER GREASE "A" (USA)

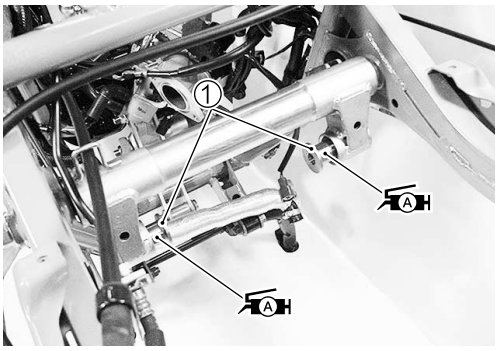

- Tighten the rear cushion rod nut ② to the specified torque.

Rear cushion rod nut ②: 50 N·m (5.0 kgf-m, 36.0 lb-ft)

- Tighten the engine mounting nut ③ to the specified torque.

Engine mounting nut ③: 93 N·m (9.3 kgf-m, 67.5 lb-ft)

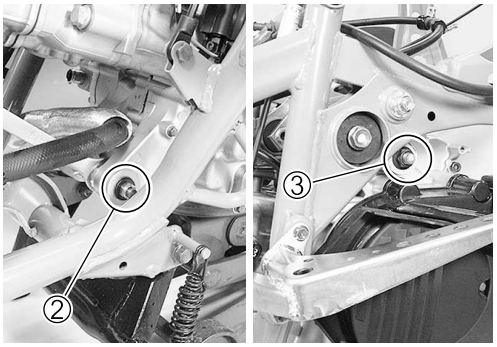

- Make sure that the thread of axle shaft is clean of any greasy matter.
- Tighten the rear axle nut to the specified torque.

Rear axle nut: 120 N·m (12.0 kgf-m, 87.0 lb-ft)

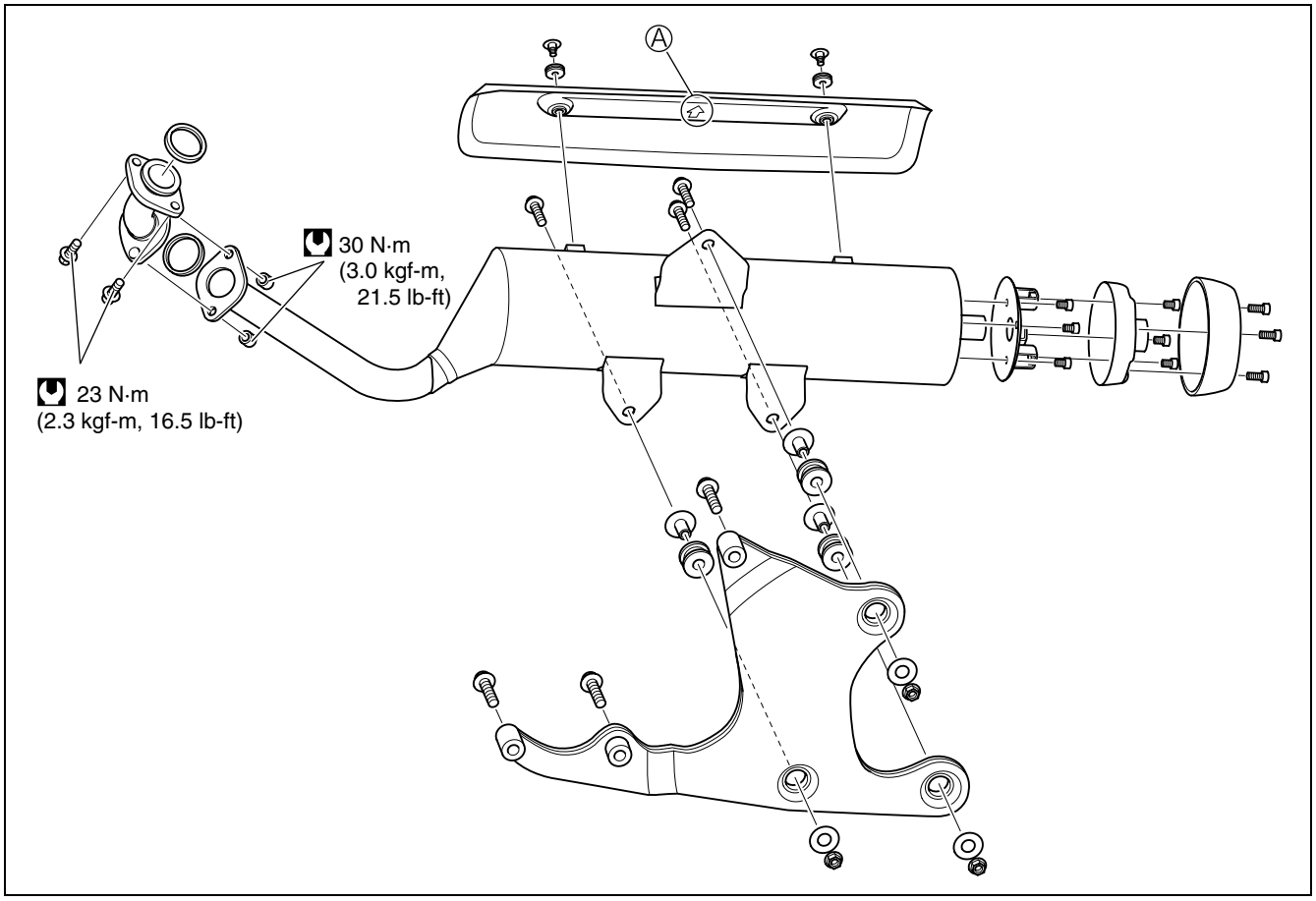

NOTE:
Install the muffler cover with its arrow mark Ⓐ pointing top.

- After the engine has been mounted, install the lead wires, cables and hoses securely.
- Pour the specified amount of final gear oil. (☞2-10)
- Pour the specified amount of engine oil. (☞2-9)
- Pour the specified amount of engine coolant. (☞2-14)
- Perform the following adjustments:

* Throttle cable. (☞2-12)
* Brake-lock. (☞2-28)

- Check for leakage of the transmission oil, engine oil and engine coolant.

ENGINE DISASSEMBLY

CAUTION

- **Put the removed parts from the engine in order of each component part.**
- **Be careful not to cause damage on the removed parts when handling.**

- Remove the air cleaner box brackets ①, ②.

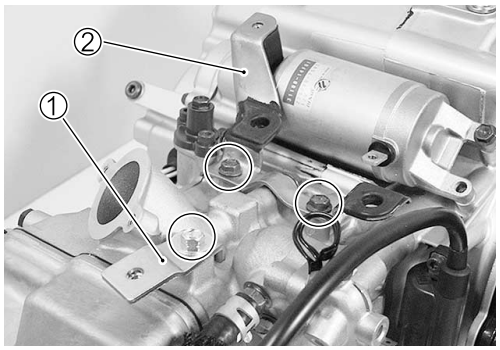

- Remove the ECT sensor coupler ③ and ignition coil ④.

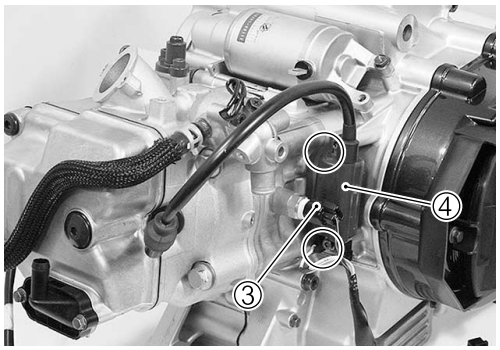

- Remove the starter motor ⑤.

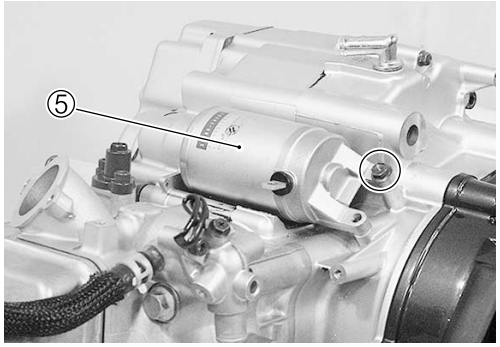

- Remove the spark plug ⑥.

TOOL 09930-10121: Spark plug wrench set

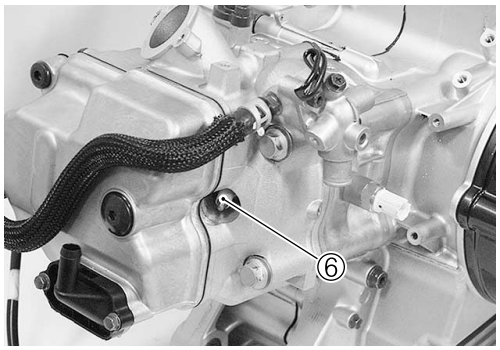

- Remove the water hose ①.

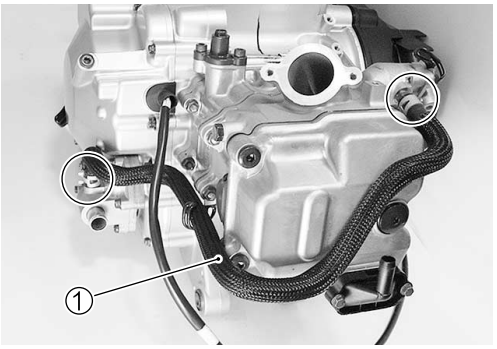

- Remove the cylinder head cover ②.

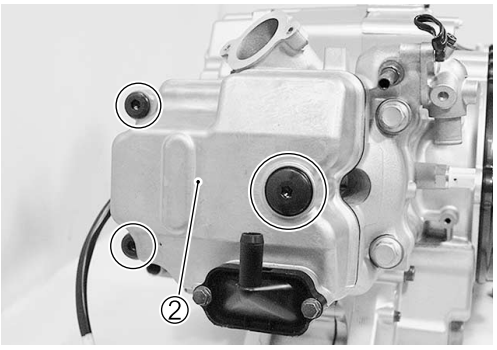

- Remove the dowel pin ③.

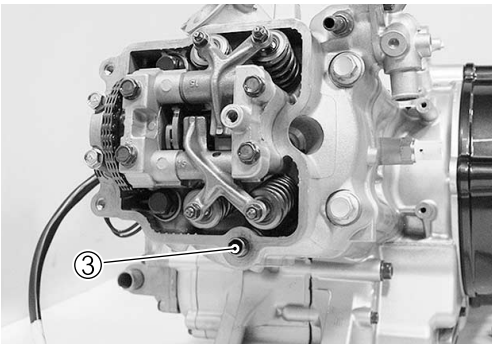

- Remove the cooling fan cover ④.
- Remove the cooling fan filter ⑤.

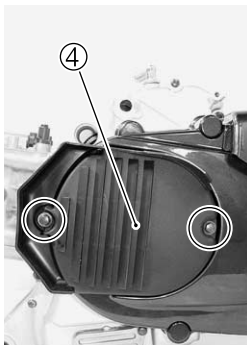

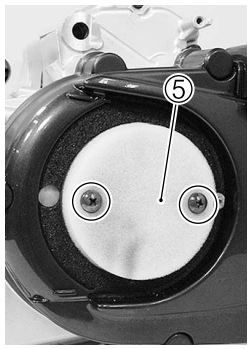

- Remove the camshaft journal holder ⑥.
- Remove the dowel pins ⑦.

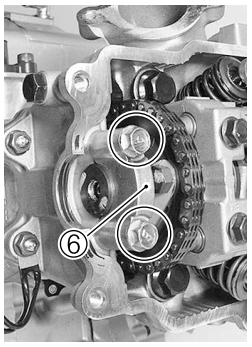

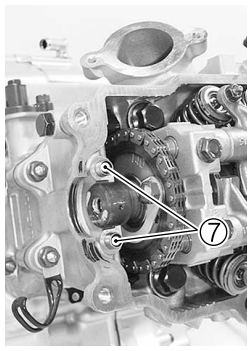

- Bend down the lock portions Ⓐ of the washer and remove the sprocket bolts ① and washer.

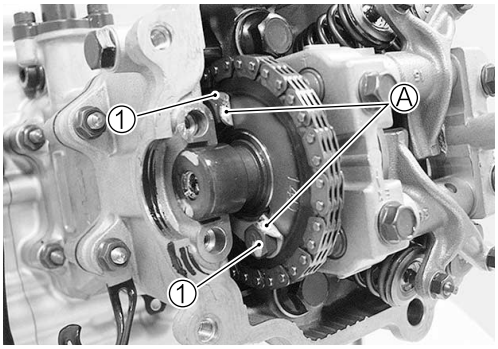

- Remove the spring holder bolt ② first and then remove the cam chain tension adjuster ③.

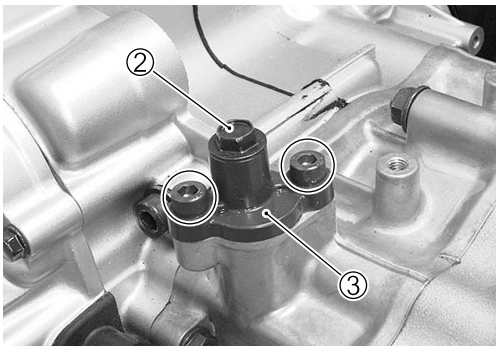

- Remove the generator cover plug ④. Bring the piston to TDC on the compression stroke by turning the crankshaft until T-mark Ⓑ on the generator rotor aligns with the mark Ⓒ on the generator cover.

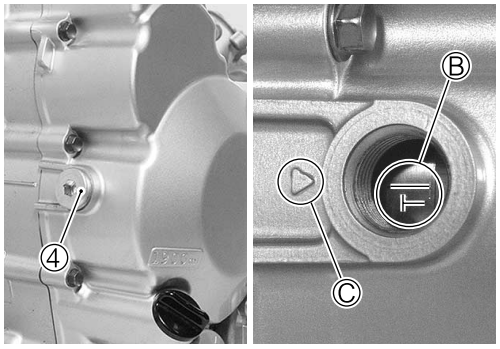

- Slide the cam sprocket ⑤ to the engine right side.

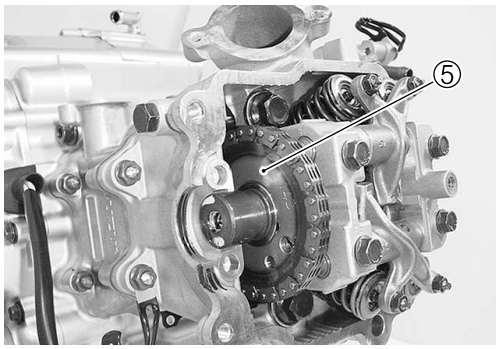

- Remove the camshaft journal holder ⑥.
- Remove the cam chain ⑦ from the cam sprocket.

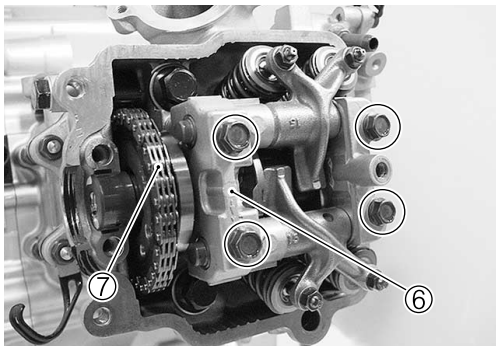

- Remove the camshaft ① and cam sprocket ②.

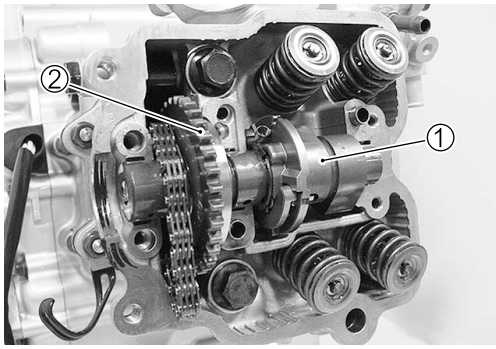

- Remove the dowel pins ③ and C-ring ④.

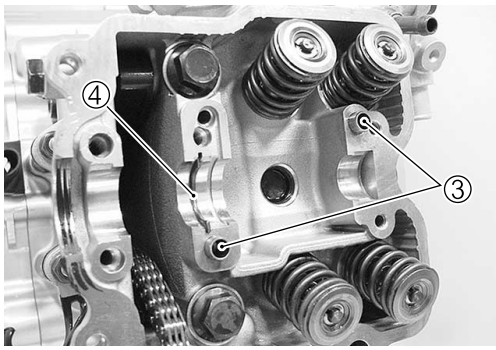

- Remove the 6-mm cylinder head nuts ⑤ and clamp ⑥.

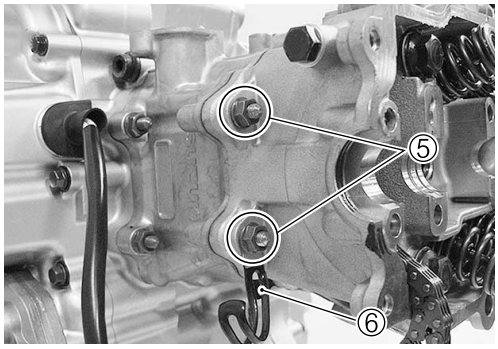

- Remove the 8-mm cylinder head nuts ⑦.

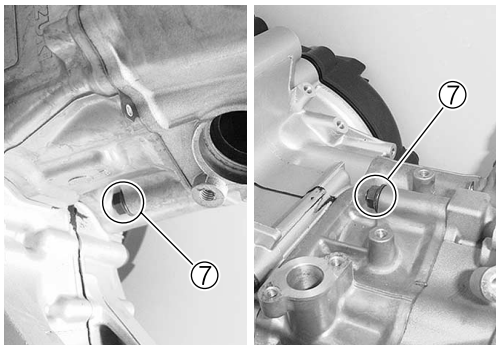

- Remove the 10-mm cylinder head bolts ⑧ along with the copper washers.

CAUTION

The cylinder head bolts must be loosened diagonally and evenly.

- Remove the cylinder head ⑨.

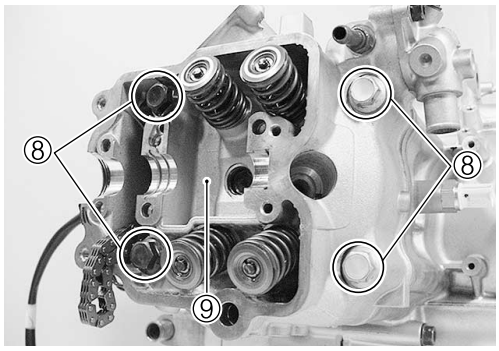

- Remove the cylinder head gasket ① and dowel pins ②.

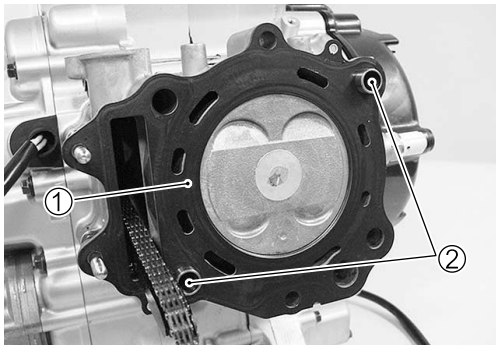

- Remove the cam chain guide ③.

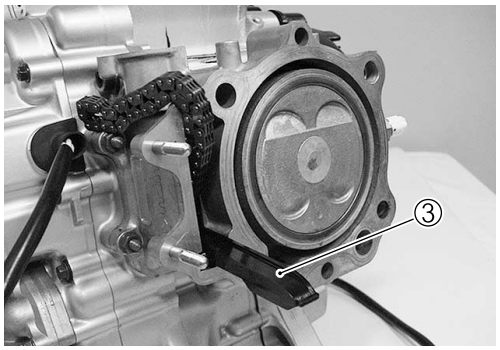

- Remove the cylinder nuts ④.
- Remove the cylinder ⑤.

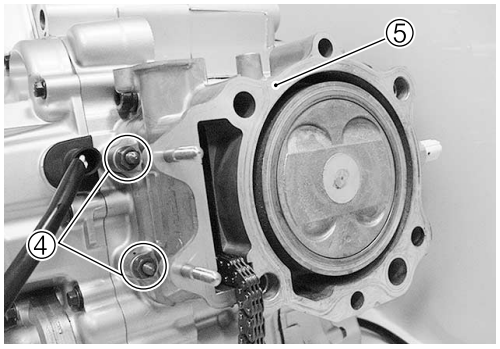

- Remove the cylinder gasket ⑥ and dowel pins ⑦.

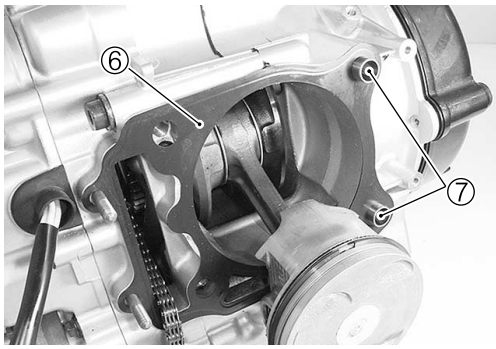

- Remove the piston pin circlip ⑧.
- Remove the piston pin ⑨.

CAUTION

Use care not to drop the removed circlip into the crankcase.

- Remove the piston ⑩.

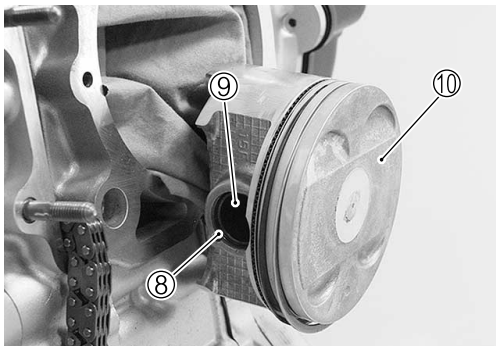

- Remove the oil filter cap ①.

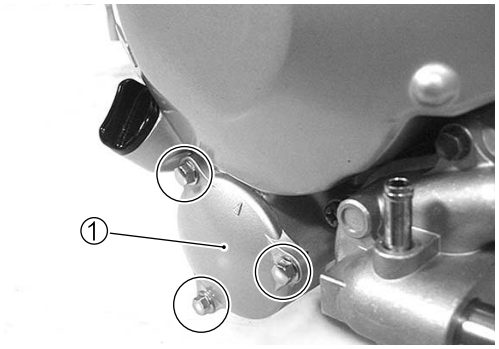

- Remove the O-ring ②.
- Remove the oil filter ③.
- Remove the O-ring ④.

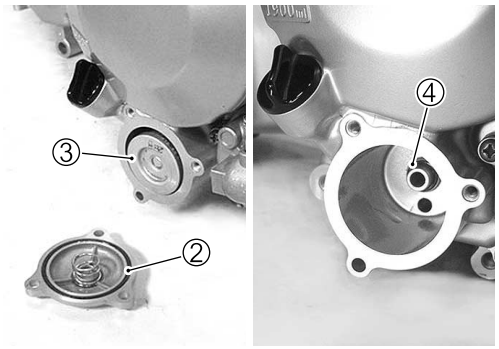

- Remove the water pump ⑤.

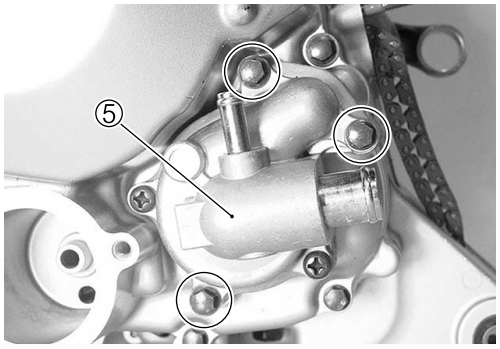

- Remove the O-ring ⑥.

- Remove the generator cover ⑦.

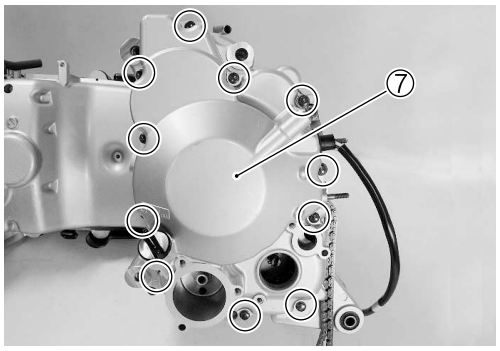

- Remove the gasket ①.

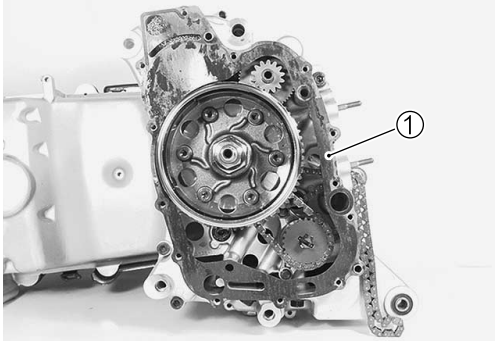

- Remove the dowel pins ②.

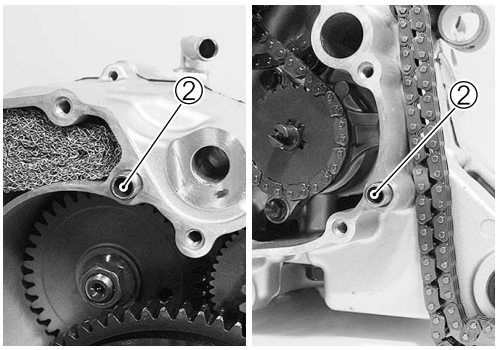

- Remove the clutch cover ③.

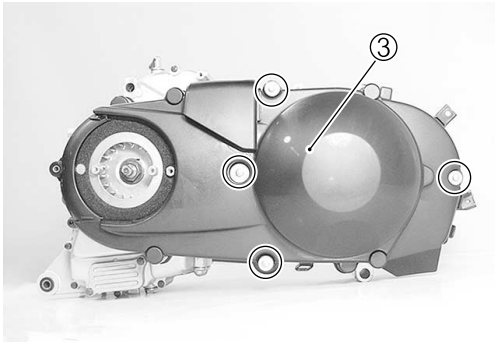

- Remove the clutch inner cover ④.

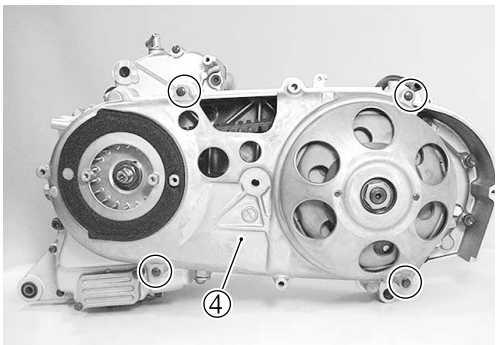

- Remove the dowel pins ⑤.

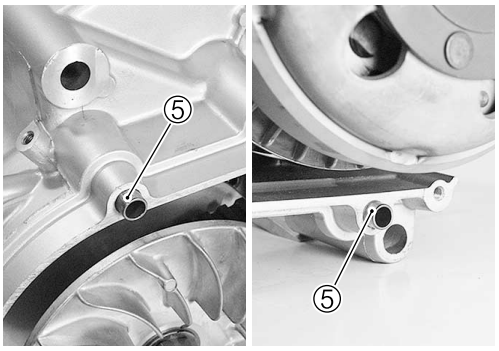

- With the crankshaft held immovable, loosen the fixed drive face nut.
- Remove the washer.
- Remove the fixed drive face ①.

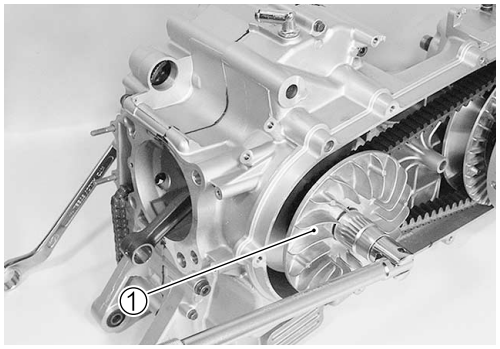

- With the clutch housing held immovable using the special tool, loosen the clutch housing nut ②.
- Remove the clutch housing ③.

TOOL 09930-40113: Rotor holder

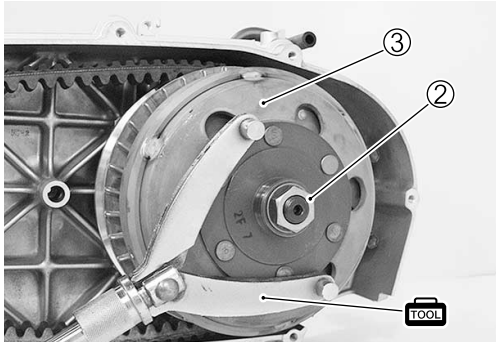

- Remove the drive V-belt ④ and clutch shoe/movable driven face assembly ⑤.

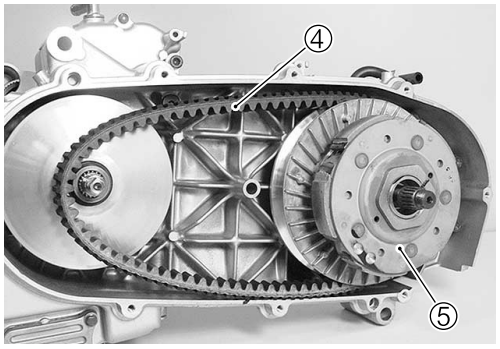

- Remove the movable drive face assembly ⑥ with the spacer ⑦.

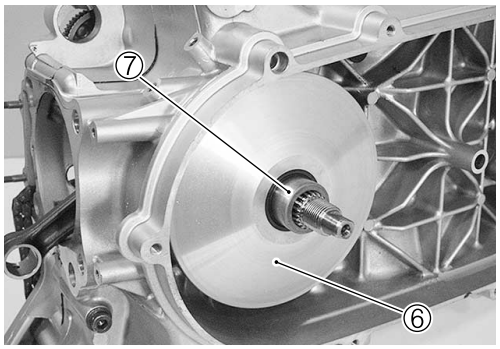

- Remove the driveshaft ⑧ together with the transmission cover ⑨.

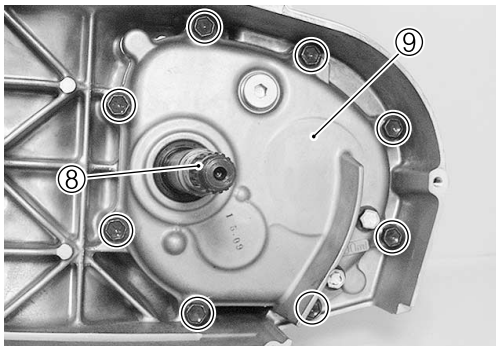

- Remove the dowel pins ① and washers ②, ③.
- Remove the final driven gear ④ together with the rear axle shaft ⑤.

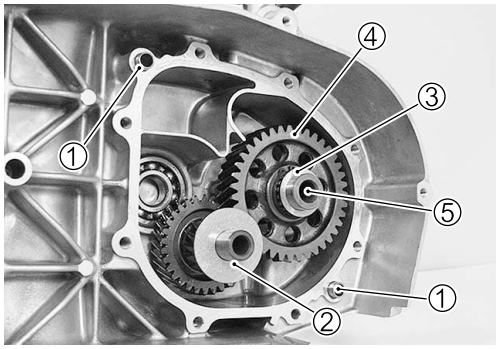

- Remove the idle shaft ⑥.

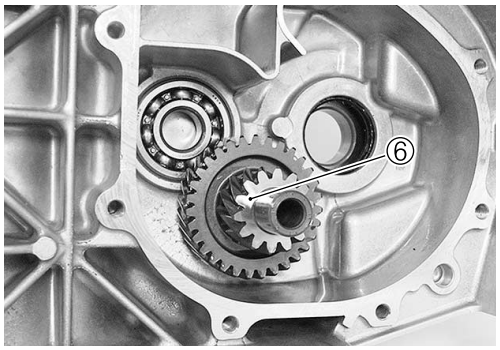

- Remove the washer ⑦.

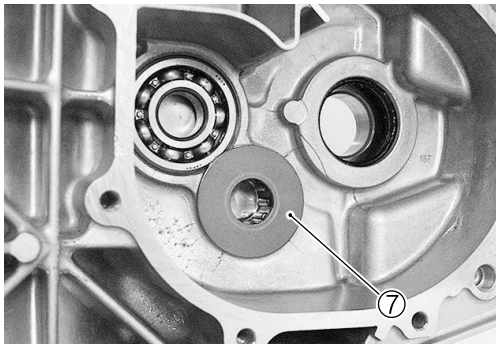

- Remove the oil sump filter cap ⑧.

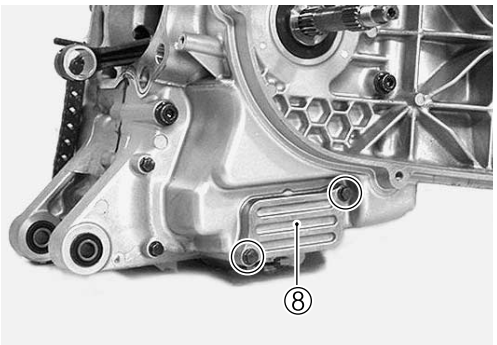

- Remove the O-ring ⑨.
- Pull out the oil sump filter ⑩.

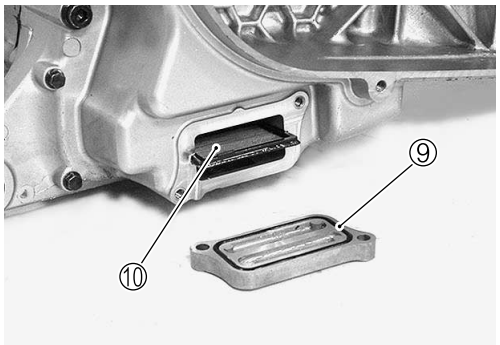

- With the generator rotor held immovable, loosen the generator rotor nut ①.

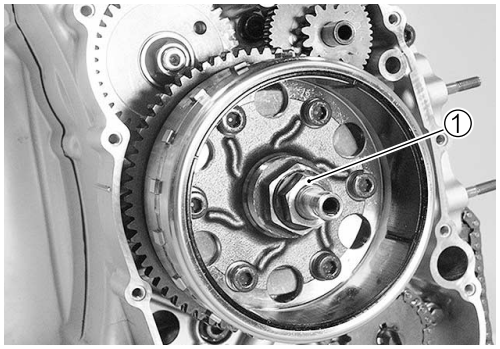

- Remove the generator rotor ② using the special tool.

TOOL 09930-31921: Rotor remover

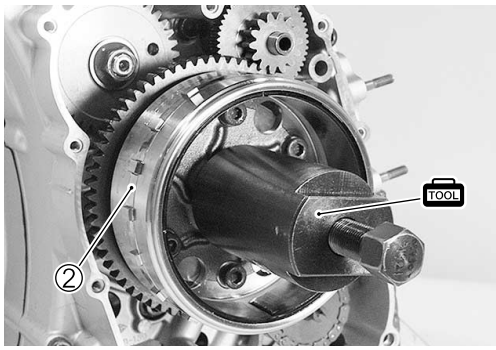

- Remove the key ③ and starter driven gear ④.

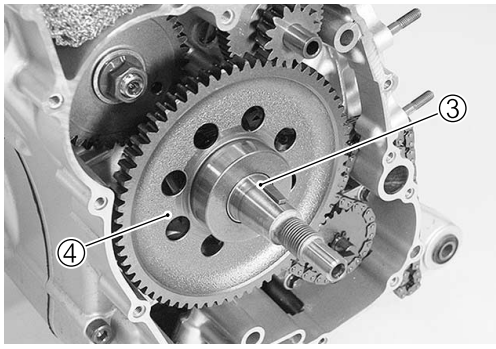

- Remove the oil pump ⑤.
- Remove the oil pump chain ⑥.

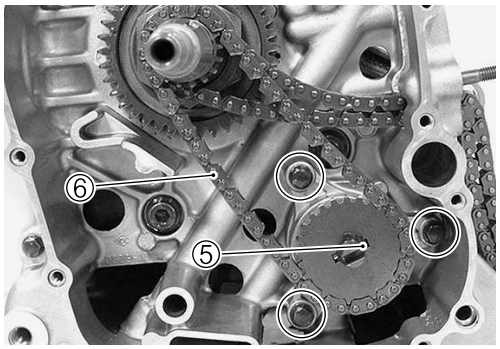

- Remove the circlip ⑦.
- Remove the oil pump gear ⑧.

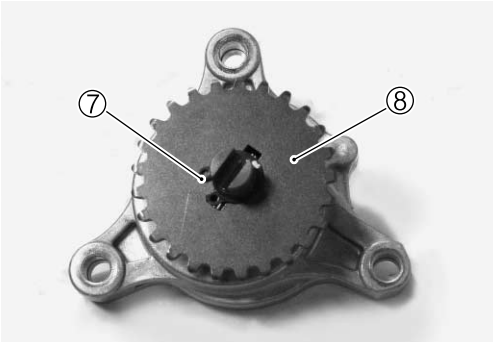

- Remove the pin ① and washer ②.

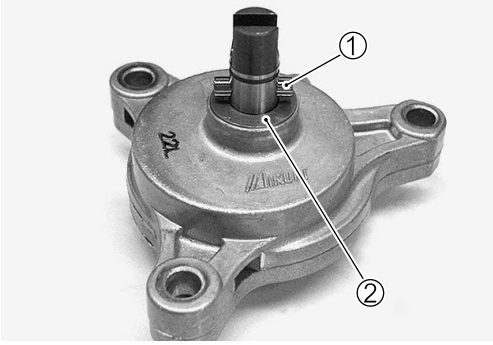

- Remove the cam chain ③, starter idle gear shaft ④ and starter idle gear ⑤.

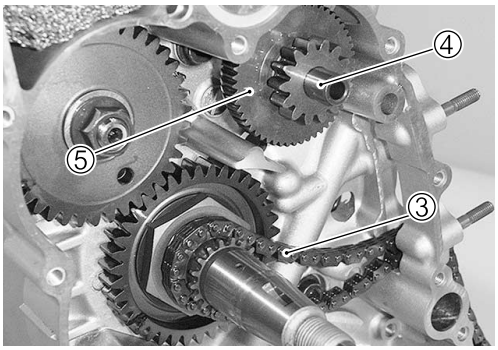

- Insert a proper steel rod ⑥ into the crankcase hole Ⓐ and pass through the crankshaft web holes Ⓑ in order to prevent the crankshaft from turning.

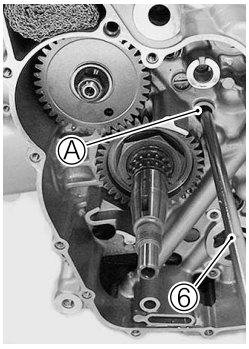

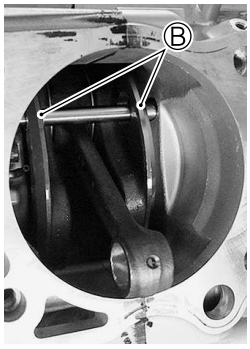

- Remove the balancer driven gear nut ⑦ and washer ⑧.

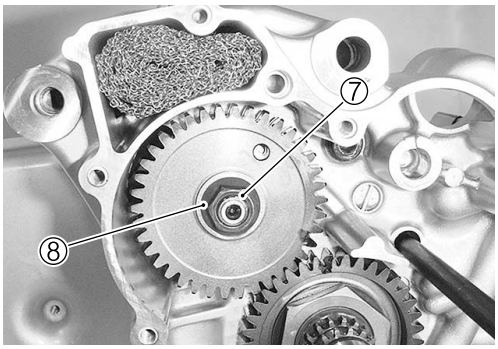

- Remove the balancer driven gear ⑨ together with the scissors gear.

- Remove the balancer shaft key ①.

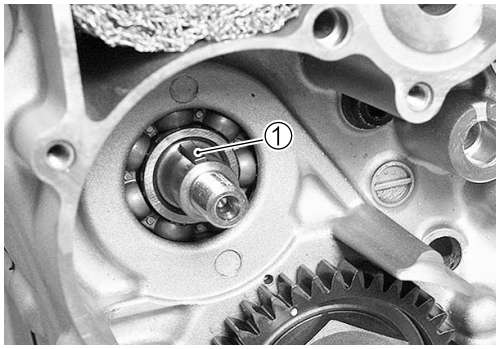

- With the crankshaft held immovable, loosen the balancer drive gear nut ②.

TOOL 09920-21410: Long socket (46 mm)

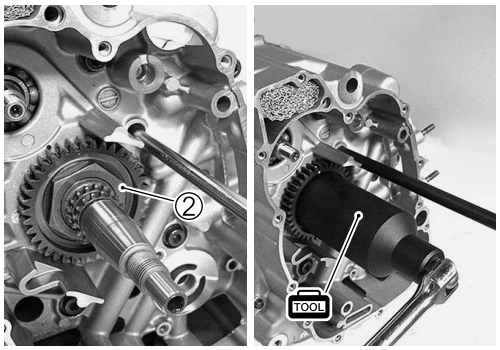

- Remove the washer ③ and balancer drive gear ④.
- Remove the pin ⑤.

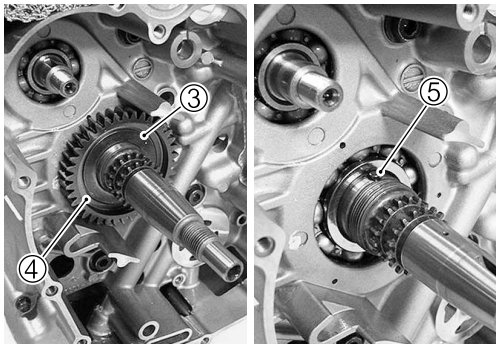

- Remove the 6-mm crankcase bolts ⑥.
- Remove the 8-mm crankcase bolts ⑦.

CAUTION

Loosen the smaller diameter crankcase bolts first and then thicker ones diagonally and evenly.

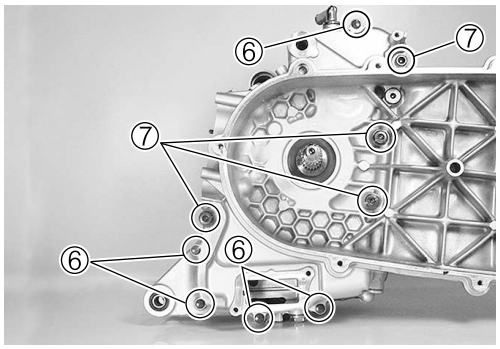

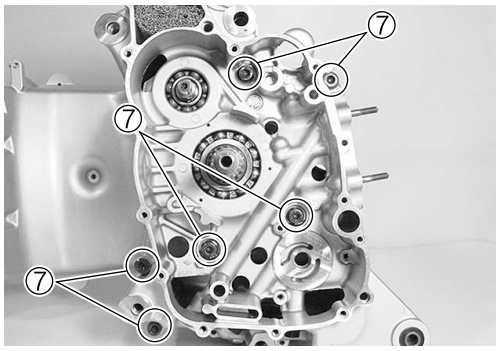

- Separate the crankcase into left and right halves using the special tool.

TOOL 09920-13120: Crankcase/crankshaft separator

NOTE:
The crankcase separator plate is parallel with the end face of the crankcase.

CAUTION

The crankshaft must remain in the left crankcase half.

- Remove the O-ring ① and dowel pins ②.

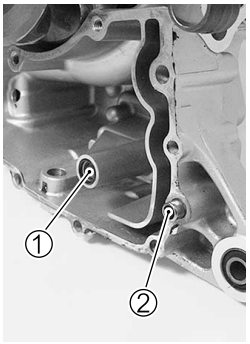

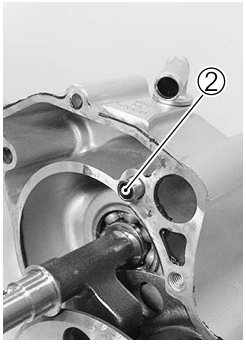

- Remove the balancer shaft ③.

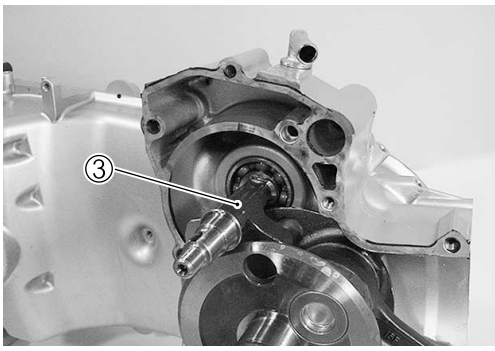

- Remove the crankshaft using the spacial tool.

TOOL 09920-13120: Crankcase/crankshaft separator

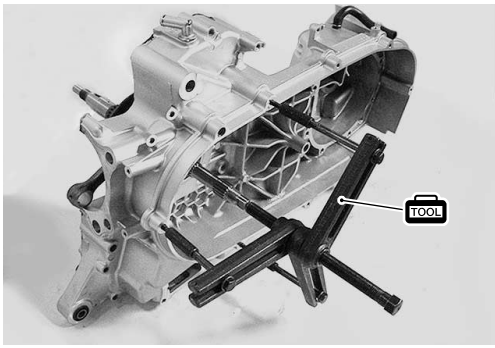

ENGINE COMPONENT INSPECTION AND SERVICE

CYLINDER HEAD COVER

DISASSEMBLY

- Remove the PAIR reed valve cover ① and PAIR reed valve ②.

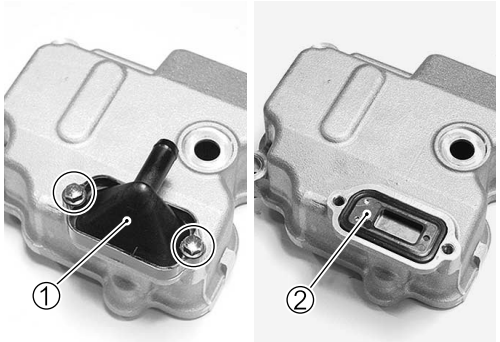

- Remove the cylinder head cover gasket ③.

INSPECTION

- Inspect the reed valve for the carbon deposit.
- If the carbon deposit is found in the reed valve, replace the PAIR reed valve with a new one.

REASSEMBLY

- Reassembly the cylinder head cover in the reverse order of disassembly. Pay attention to the following points:
- Install the cylinder head cover gasket ①.

CAUTION

Replace the removed cylinder head cover gasket with a new one.

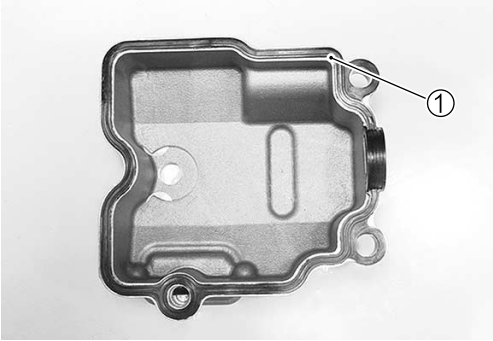

- Apply THREAD LOCK to the PAIR reed valve cover bolts and tighten them.

1342 99000-32050: THREAD LOCK "1342"

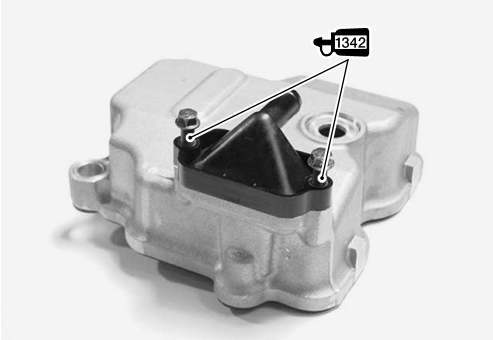

CAMSHAFT HOUSING

DISASSEMBLY

- Pull out the rocker arm shafts ① and remove the exhaust and intake valve rocker arms (② and ③).

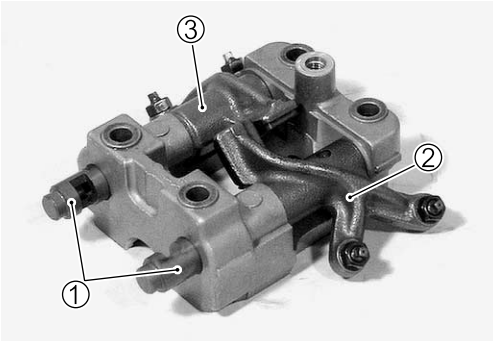

ROCKER ARM SHAFT OUTSIDE DIAMETER INSPECTION

- On the sliding surface, take two measurements, at right angle to each other.
- If the outside diameter measured is less than the standard value, replace the shaft.

DATA Rocker arm shaft O.D.(IN & EX):
Standard: 11.973 – 11.984 mm (0.471 – 0.472 in)

TOOL 09900-20205: Micrometer (0 – 25 mm)

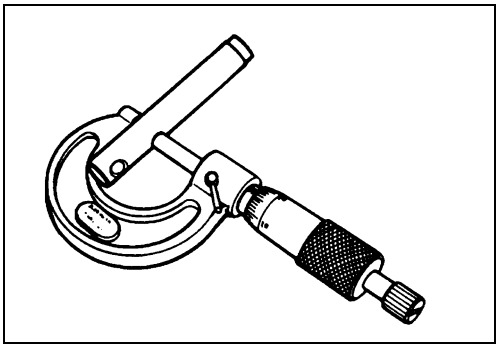

ROCKER ARM SHAFT INSIDE DIAMETER INSPECTION

- Measure the rocker arm inside diameter in two directions at right angle to each other.
- If the inside diameter measured exceeds the standard value, replace the shaft.

DATA Rocker arm shaft I.D.(IN & EX):
Standard: 12.000 – 12.018 mm (0.472 – 0.473 in)

TOOL 09900-20605: Dial calipers

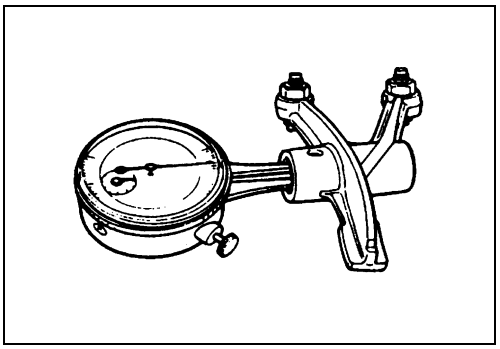

REASSEMBLY

- Reassembly the camshaft housing in the reverse order of disassembly. Pay attention to the following points:
- Apply engine oil to the rocker arm shafts sufficiently.

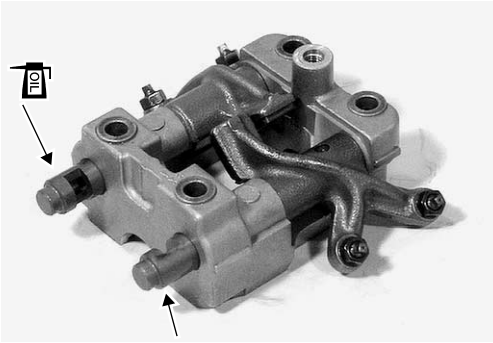

CYLINDER HEAD

DISASSEMBLY

- Compress the valve spring ① using the special tools.

TOOL 09916-14510: Valve lifter
09916-14910: Attachment

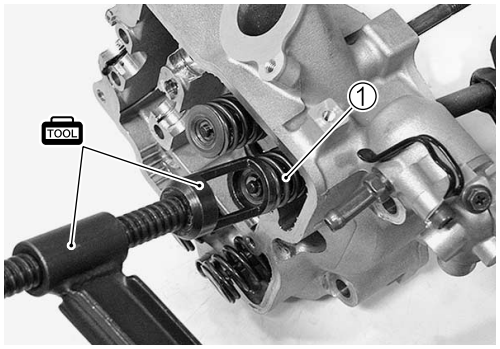

- Remove the cotter halves ②.

TOOL 09916-84511: Tweezers

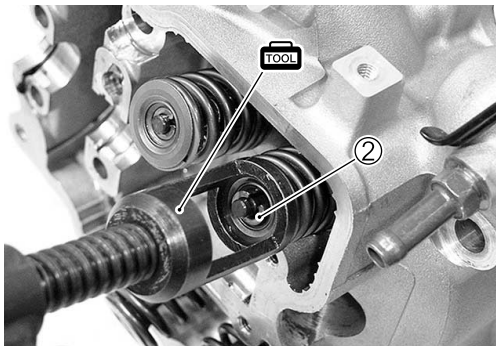

- Remove the valve spring retainer ③.
- Remove the spring ④.

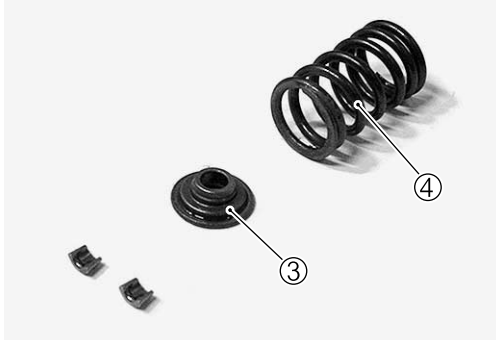

- Remove the valve ⑤ from the other side.
- Remove the valve stem seal ⑥.
- Remove the spring seat ⑦.

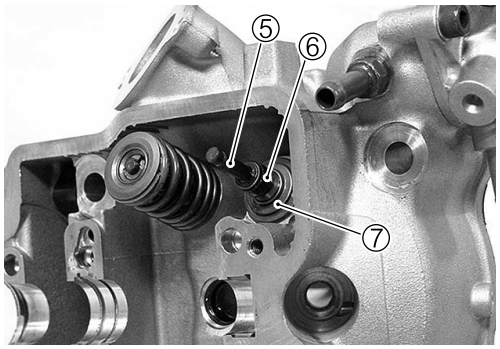

- Remove the cam chain tensioner bolt ⑧ and gasket washer ⑨.
- Remove the cam chain tensioner ⑩.

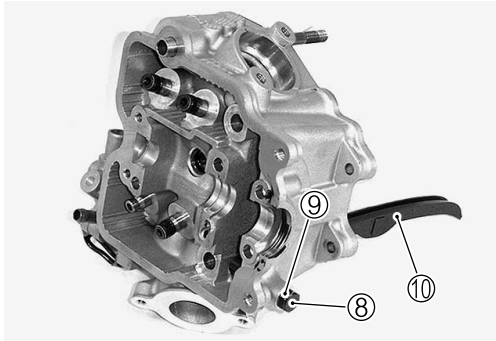

- Remove the thermostat cover ⑪.

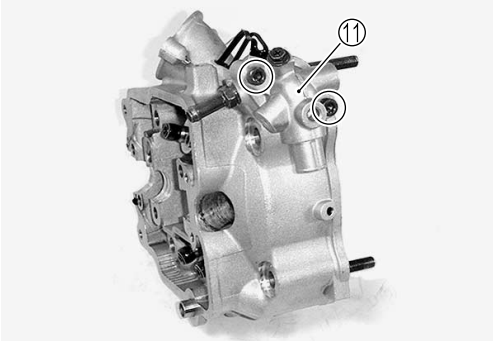

- Remove the thermostat ⑫.

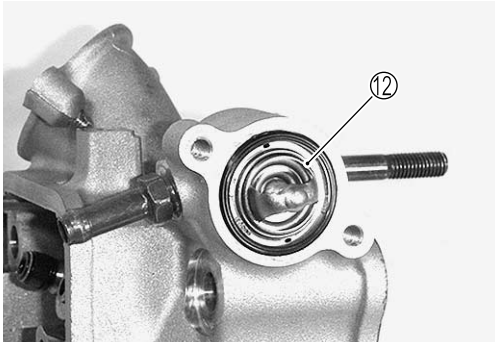

CYLINDER HEAD DISTORTION

- Check for distortion of the mating surface diagonally with a straightedge and thickness gauge as shown.
- If distortion exceeds the service limit, repair or replace the cylinder head.

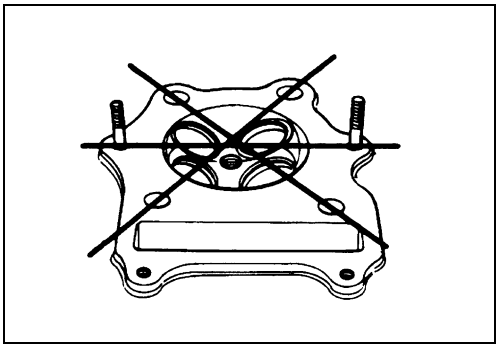

DATA Cylinder head distortion:
Service Limit: 0.05 mm (0.002 in)

TOOL 09900-20803: Thickness gauge

VALVE FACE WEAR

- Visually inspect each valve face for wear. Replace any valve with an abnormally worn face. The thickness of the valve face decreases as the face wears. Measure the valve face Ⓣ. If it is out of specification replace the valve with a new one.

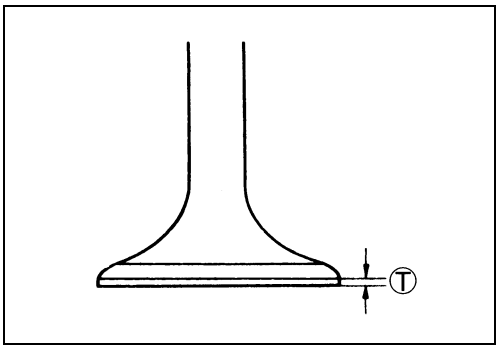

DATA Valve head thickness Ⓣ:
Service Limit: 0.5 mm (0.02 in)

TOOL 09900-20102: Venier calipers

VALVE STEM RUNOUT

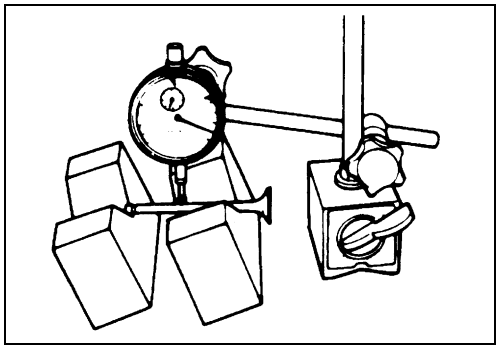

- Support the valve with V-blocks,as shown,and check its runout with a dial gauge.
- If the service limit is exceeded or abnormal condition exists, replace the valve.

DATA **Valve stem runout:**
Service Limit: 0.05 mm (0.002 in)

TOOL **09900-20607: Dialgauge (1/100 mm)**
09900-20701: Magnetic stand
09900-21304: V-block (100 mm)

VALVE HEAD RADIAL RUNOUT

- Place a dial gauge as shown and measure valve head radial runout.
- If the service limit is exceeded, replace the valve.

DATA Valve head radial runout (IN & EX):
Service Limit: 0.03 mm (0.001 in)

TOOL 09900-20607: Dial gauge (1/100 mm)
09900-20701: Magnetic stand
09900-21304: V-block (100 mm)

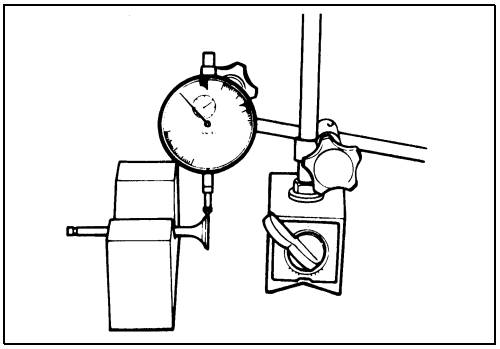

VALVE STEM DEFLECTION

- Lift the valve about 10mm from the valve seat.
- Measure the valve stem diflection in two directions, perpendicular to each other,by positioning the dialgange as shown.
- If the diflection measured exceed the limit,then determine whether the valve or the guide should be replaced with a new one.

DATA Valve stem deflection (IN & EX):
Service Limit: 0.35 mm (0.01 in)

TOOL 09900-20607: Dial gauge (1/100 mm)
09900-20701: Magnetic stand

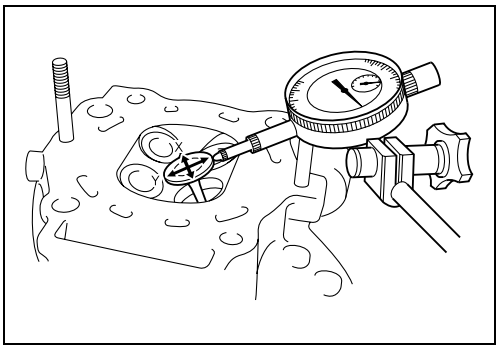

VALVE STEM DIAMETER

- If the valve stem deflection exceeds the service limit, measure the valve stem outside diameter.If the diameter measured is within the standard range, replace the valve guide.
- For each of upper, middle and lower sections within the sliding range, two measurements, each in crosswise direction must be taken.

DATA Valve stem O.D.:
Standard (IN): 4.975 – 4.990 mm (0.1959 – 0.1965 in)
(EX): 4.955 – 4.970 mm (0.1951 – 0.1957 in)

TOOL 09900-20205:Micrometer (0 – 25 mm)

NOTE:
If valve guides have to be replaced, refer to the valve guide servicing.

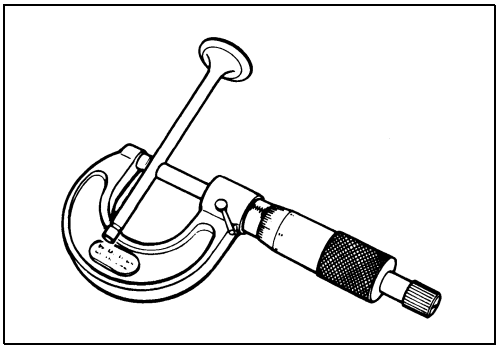

VALVE GUIDE SERVICING

- Using the valve guide remover, drive the valve guide out toward the intake or exhaust camshaft side.

TOOL 09916-44310: Valve guide remover/installer

NOTE:
** Discard the remove valve guide subassemblies.*
** Only oversized valve guides are available as replacement parts. (Part No.11115-14D71)*

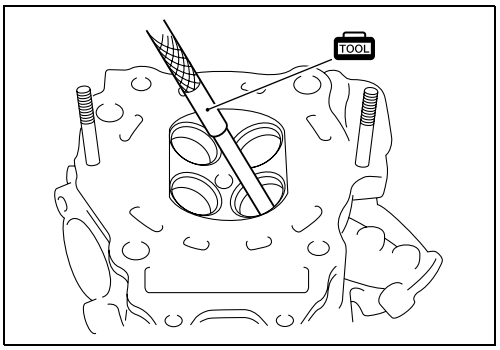

- Re-finish the valve guide holes in the cylinder head using the reamer and handle.

TOOL 09916-34580: Valve guide reamer (10.8 mm)
09916-34542: Valve guide reamer handle

CAUTION

Use the valve guide reamer with clockwise.

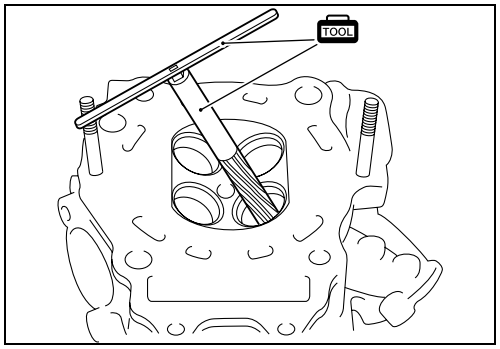

- Apply engine oil to the stem hole.

CAUTION

Replace the valve guide with a new one.

- Install the valve guide to the cylinder head using the special tools.

NOTE:
Press in the valve guide all the way until the valve guide attachment comes in contact with the cylinder head.

TOOL 09916-57330: Valve guide installer
09916-57340: Valve guide installer attachment

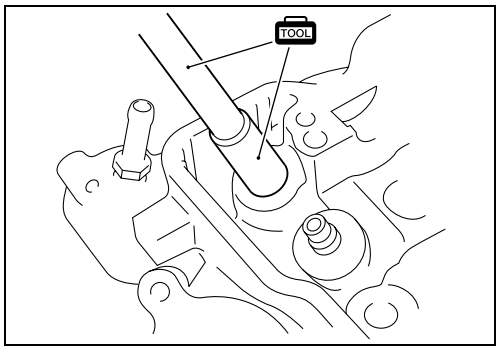

- Affer installing the valve guides, re-finish their guiding bores using the reamer. Be sure to clean and oil the guides after reaming.

TOOL 09916-34550: Valve guide reamer (5.5 mm)
09916-54542: Valve guide reamer handle

NOTE:
Insert the reamer from the combustion chamber and always turn the reamer handle clockwise.

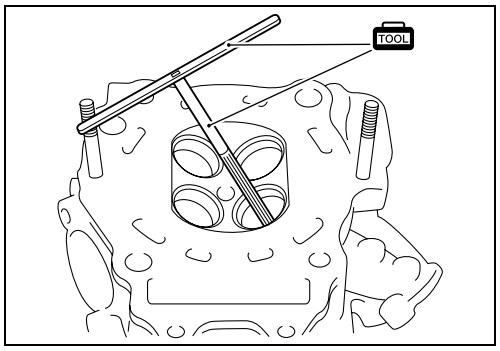

VALVE SEAT WIDTH INSPECTION

- Visually check for valve seat width on each valve face.
- If the valve face has worn abnomally, replace the valve.
- Coat the valve seat with Prussian Blue and set the valve in place. Rotate the valve with light pressure.
- Check that the transferred blue on the valve face is uniform all around and in center of the valve face.

TOOL 09916-10911: Valve lapper set

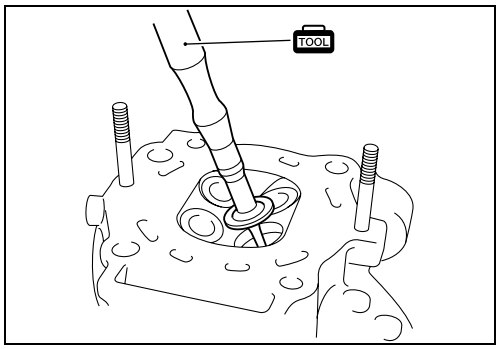

- If the seat width Ⓦ measured exceeds the standard value, or seat width is not uniform reface the seat using the seat cutter.

DATA Valve seat width Ⓦ (IN & EX):
Standard: 0.9 – 1.1 mm
Service Limit: Reface if measurement does not agree with standard value.

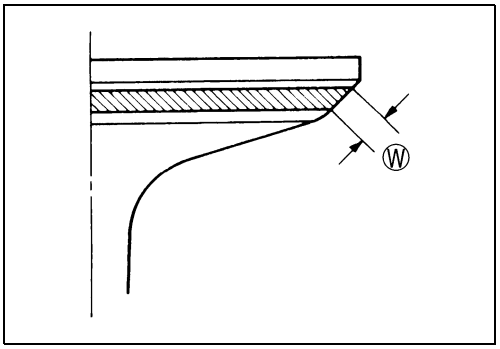

VALVE SEAT SERVICING

- The valve seats ① for both the intake and exhaust valves are machined to three different angles. The seat contact surface is cut at 45 °.

	INTAKE	EXHAUST
45 °	N – 122	N – 122
15 °	N – 608	N – 121

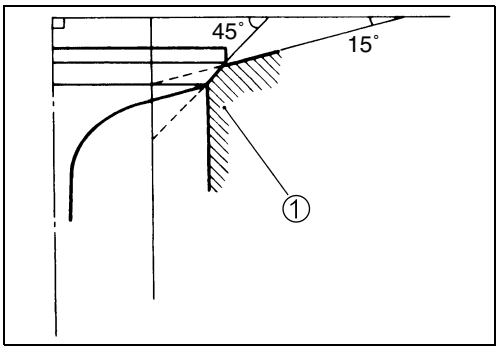

TOOL 09916-21111: Valve seat cutter set
09916-20610: Valve seat cutter (N-121)
09916-20620: Valve seat cutter (N-122)
09916-24935: Valve seat cutter (N-608)
09916-24311: Solid pilot (N-100 – 5.0)
09916-22410: Solid pilot (N-140 – 5.0)

NOTE:
Use the solid pilot along with the valve seat cutter (N-121 and -122).

CAUTION

The valve seat contact area must be inspected after each cut.

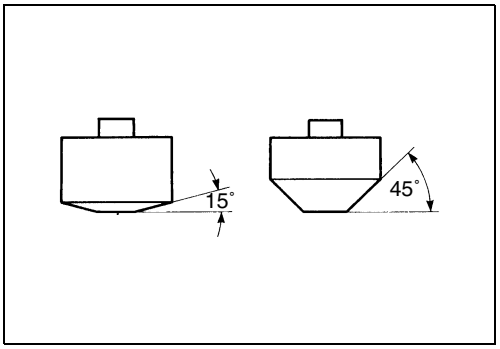

- When installing the solid pilot, rotate is slightly. Seat the pilot snugly.

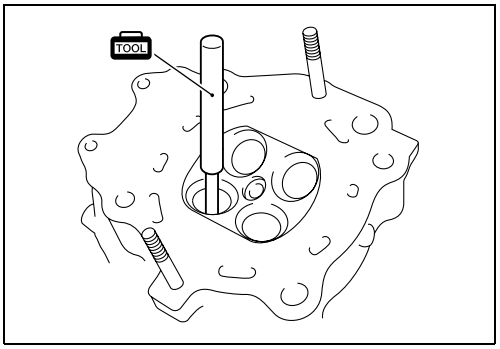

- Install the 45 ° cutter ②, attachment ③ and T-handle ④.

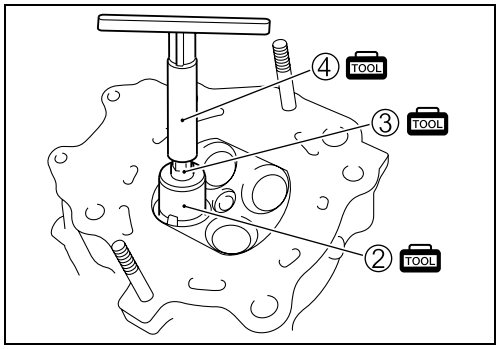

- Using the 45 ° cutter, descale and clean up the seat. Rotate the cutter one or two turns.
- Measure the valve seat width after every cut.

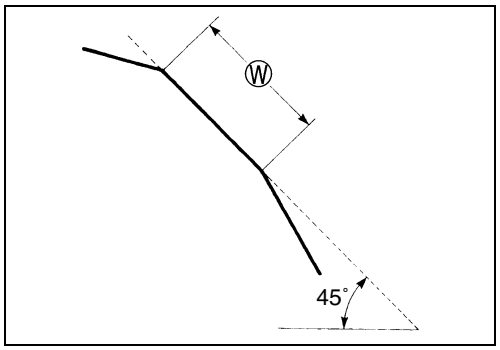

- If the valve seat is pitted or burned, use the 45 ° cutter to condition the seat some more.

NOTE:
Cut only the minimum amount necessary from the seat to prevent the possibility of the valve stem becoming too close to the rocker arm for correct valve contact angle.

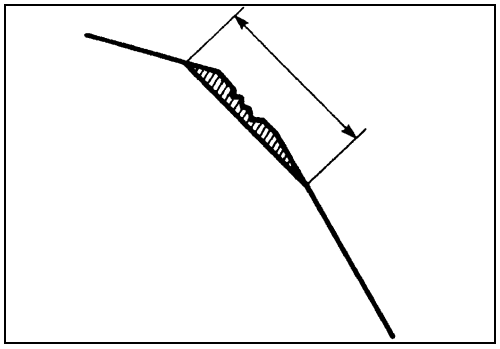

TOP NARROWING CUT

- Measure the valve seat width.
- If the contact area Ⓦ is too high on the valve, or if it is too wide, use the 15° cutter to lower and narrow the contact area.

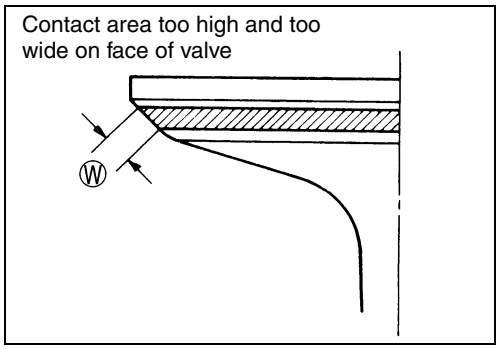

- Use the 15 ° cutter.

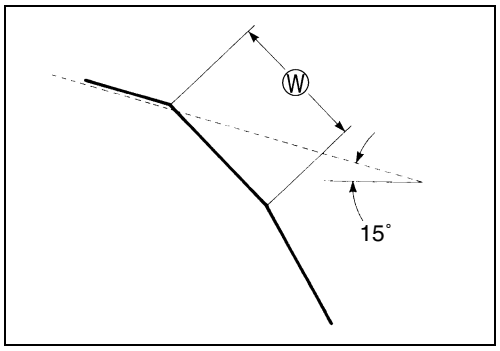

FINAL SEAT CUT

- If the contact area Ⓦ is too low or too narrow, use the 45 ° cutter to raise and widen the contact area.
- After the desired seat position and width is achieved, use the 45 ° cutter very lightly to clean up any burrs caused by the previous cutting operations.

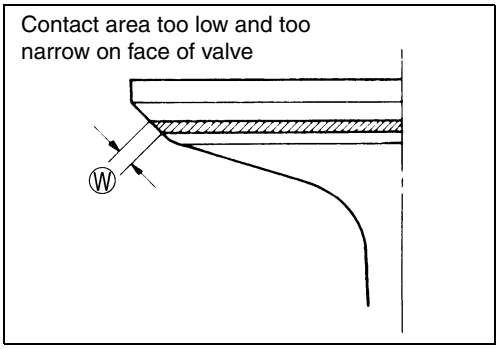

CAUTION

Do not use lapping compound after the final cut is made. The finished valve seat should have a velvety smooth finish but not a highly polished or shiny finish. This will provide a soft surface for the final seating of the valve which will occur during the first few seconds of engine operation.

NOTE:
After servicing the valve seats, be sure to check the valve clearance after the cylinder head has been reinstalled. (☞2-5)

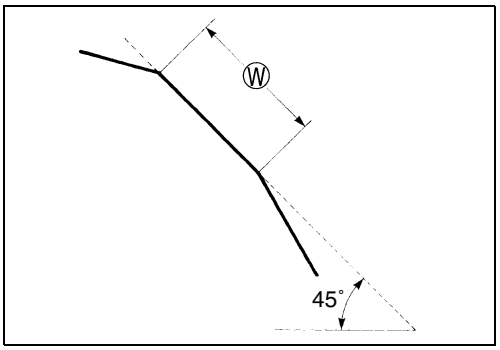

VALVE SEAT SEALING CONDITION INSPECTION

- Clean and assemble the head and valve components. Fill the intake and exhaust ports with gasoline to check for leaks.
- If any leaks occur, inspect the valve seat and face for burrs or other things that could prevent the valve from sealing.

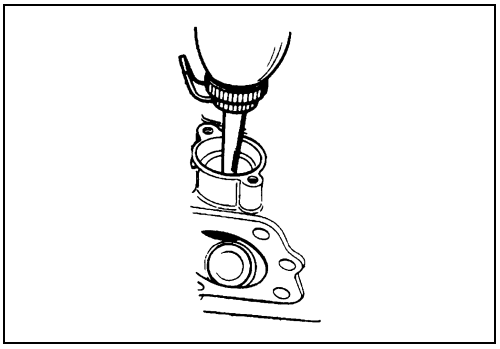

⚠ WARNING

Always use extreme caution when handling gasoline.

VALVE STEM END CONDITION

- Inspect the valve stem end face for pitting and wear.

CAUTION

If pitting or wear is present, resurface the valve stem end. Make sure that the length Ⓐ is not less than 1.7 mm. If this length becomes less than 1.7 mm, replace the valve.

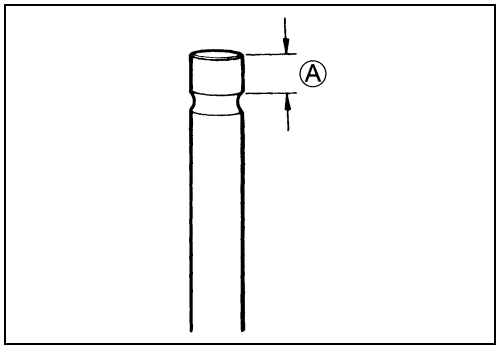

DATA Valve stem end length: Service Limit: 1.7 mm (0.07 in)

TOOL 09900-20102: Vernier calipers

VALVE SPRING INSPECTION

- The force of the coil spring keeps the valve seat tight. A weakened spring results in reduced engine power output and often accounts for the chattering noise coming from the valve mechanism.
- Inspect the valve spring for proper strength by measuring its free length and also by the force required to compress it. If the spring length is less than the service limit or if the force required to compress the spring does not fall within the specified range, replace the spring.

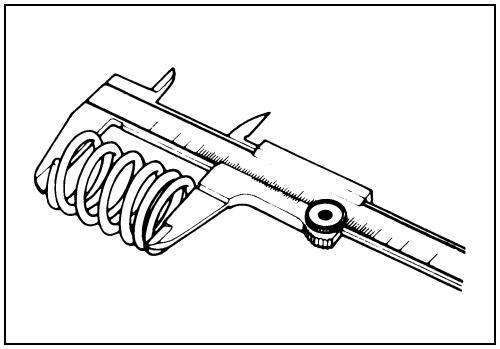

TOOL 09900-20102: Vernier calipers

DATA Valve spring free length (IN & EX):
Service Limit: 38.8 mm (1.53 in)

DATA Valve spring tension (IN & EX):
Standard: 182 – 210N (18.2 – 21.0 kgf) /31.5 mm
(40.1 – 46.3 lbs/1.24 in)

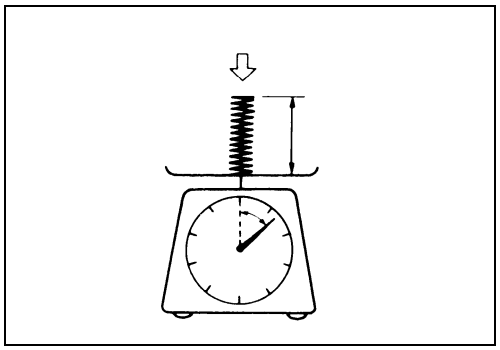

REASSEMBLY

- Reassemble the cylinder head in the reverse order of disassembly. Pay attention to the following points:
- Apply MOLYBDENUM OIL SOLUTION on the stem seal ① and install it onto the valve guide by hand.

MOLYBDENUM OIL SOLUTION

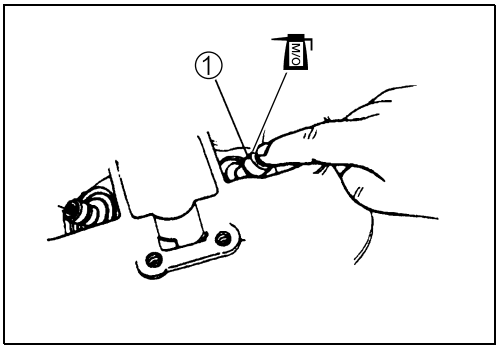

CAUTION

Replace the stem seal with a new one.

- Inseart the valves, with their stems coated with molybdeum oil solution all around and along the full stem length without any break.

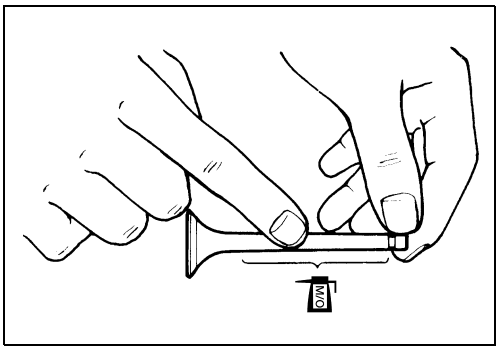

CAUTION

When installing the valve, insert the stem slowly while rotating and taking care not to cause damage to the oil seal lip.

- Install the valve spring with the small-pitch portion facing cylinder head.

Ⓐ: Small-pitch portion
Ⓑ: Large-pitch portion

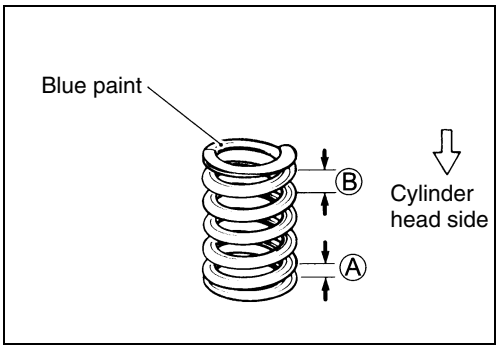

- Compress the valve spring ① using the special tools.

TOOL 09916-14510: Valve lifter
09916-14910: Attachment
09916-84511: Tweezers

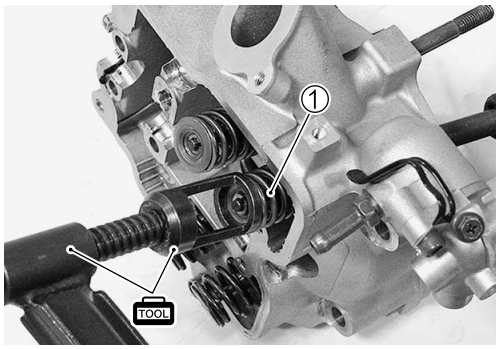

CAUTION

Compressing of the valve spring must be limited to the extent only necessary to prevent the spring from fatigue.

- Install the valve cotter halves ②.

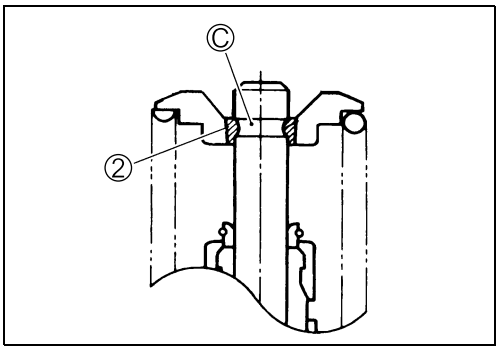

CAUTION

Check that the rounded lip of the cotter ② is securely fitted in the groove Ⓒ in the valve stem end.

NOTE:
To facilitate assembly, apply a little grease to the valve cotter when fitting into the valve stem groove.

CAMSHAFT

CAM WEAR INSPECTION

- Check the sliding surface for extraordinary.
- Measure the cam height Ⓗ with a micrometer.
- If the service limit has been exceeded,replace the camshaft.

DATA Cam height Ⓗ: Service Limit: (IN) 33.13 mm (1.30 in)
(EX) 33.00 mm (1.30 in)

TOOL 09900-20202: Micrometer (25 – 50 mm)

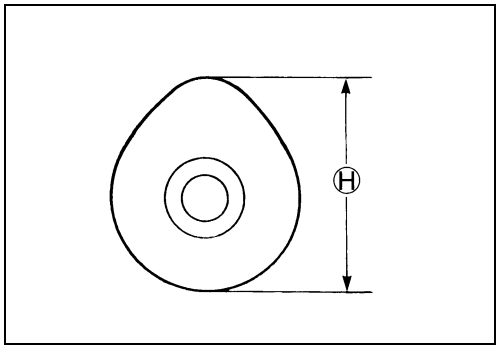

CAMSHAFT JOURNAL WEAR INSPECTION

- Place the plastigauge between the camshaft ① and camshaft holder and tighten the camshaft holder bolt to the specified torque.

TOOL 09900-22301: Plastigauge
09900-22302: Plastigauge

Camshaft holder bolt: 10 N·m (1.0 kgf-m, 7.0 lb-ft)

NOTE:
Do not rotate the camshaft after the camshaft holder has been tightened with the plastigauge in place.

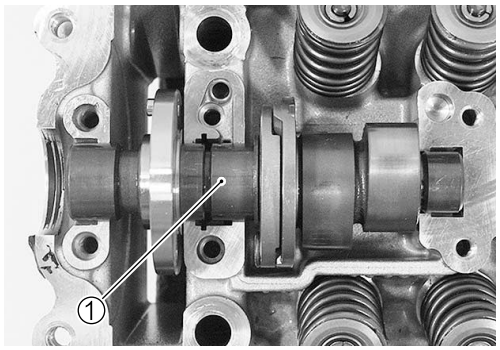

- Remove the camshaft holders and read the width of the compressed plastigauge with envelope scale.
- This measurement should be taken at the widest part.

DATA Camshaft journal oil clearance:
Service Limit: (ϕ22) 0.15 mm (0.006 in)
(ϕ17.5) 0.15 mm (0.006 in)

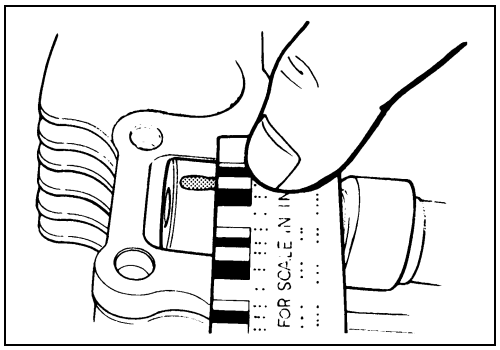

- If the clearance exceeds the service limit, measure the inside diameter of camshaft journal holder using a small bore gauge.

DATA Camshaft journal holder I.D.:
Standard: (ϕ22) 22.012 – 22.025 mm (0.8666 – 0.8671 in)
(ϕ17.5) 17.512 – 17.525 mm (0.6894 – 0.6900 in)

TOOL 09900-22403: Small bore gauge (18 – 35 mm)

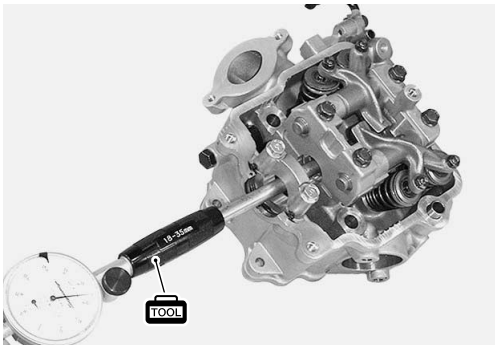

- Measure the outside diameter of camshaft journal using a micrometer.
- Calculate from the measurement to determine if the clearance falls within the standard range when the camshaft is replaced with new one. If the clearance does not come to the standard range, replace both the camshaft and cylinder head with new ones.

DATA Camshaft jouranal O.D.:
Standard: (ϕ22) 21.959 – 21.980 mm (0.8645 – 0.8653 in)
(ϕ17.5) 17.466 – 17.484 mm (0.6876 – 0.6883 in)

TOOL 09900-20205: Micrometer (0 – 25 mm)

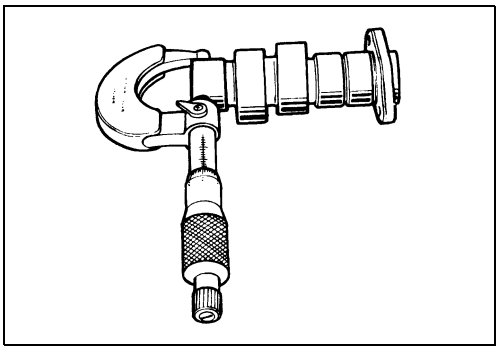

CAMSHAFT RUNOUT

- Inspect the camshaft surface for scrach.
- With the camshaft held on the V-blocks, measure the runout with a dial gauge. If the runout exceeds the service limit, replace the camshaft.

DATA Camshaft runout: Service Limit: 0.10 mm (0.004 in)

TOOL 09900-20607: Dial gauge (1/100 mm)
09900-20701: Magnetic stand
09900-21304: V-block set (100 mm)

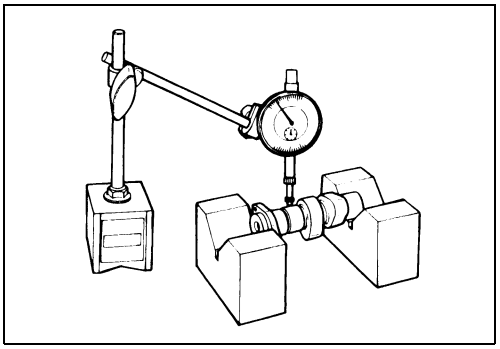

CAM CHAIN TENSION ADJUSTER

CAM CHAIN TENSION ADJUSTER INSPECTION

- Check that the push rod ① can slide smoothly with the lock ② of the ratchet mechanism released. If it does not slide smoothly or the ratchet mechanism is worn or damaged, replace the camchain tension adjuster with a new one.

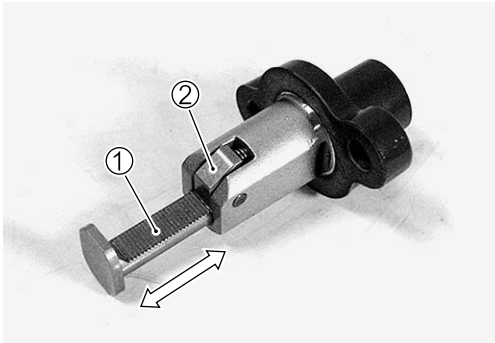

AUTOMATIC DECOMP

- Check that decomp cam ① moves smoothly and pin ② rotates together. If any abnormal condition are found, replace the camshaft.

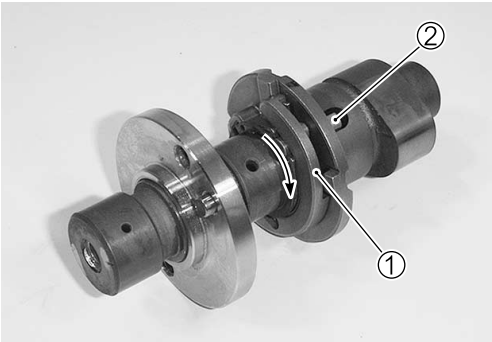

CAM CHAIN GUIDE INSPECTION

- Check the cam chain guide for wear and damage.
- If it is found to be damaged, replace it with a new one.

CAM CHAIN TENSIONER INSPECTION

- Check the contacting surface ① of the cam chain tensioner.
- If it is worn or damaged, replace it with a new one.

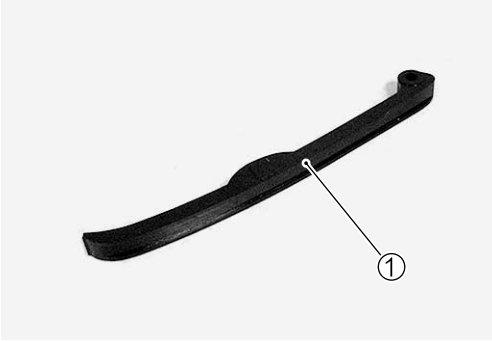

CAM CHAIN TENSIONER REMOUNTING

- Install the cam chain tensioner ① in the cylinder head.
- Install the gasket washer ② to the bolt ③, and then tighten it to the specified torque.

Cam chain tensioner bolt: 13 N·m (1.3 kgf-m, 9.5 lb-ft)

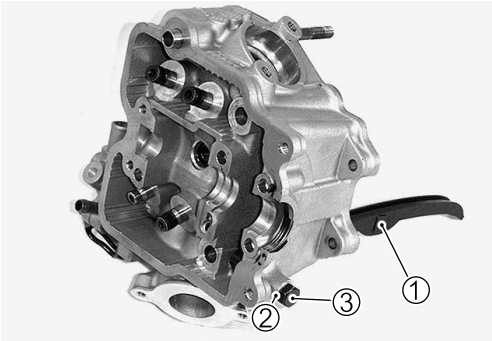

CYLINDER

CYLINDER DISTORTION

- Measure the distortion in diagonal directions on the cylinder upper surface.
- If the distortion exceeds the service limit, replace the cylinder.

DATA Cylinder distortion: Service Limit: 0.05 mm (0.002 in)

TOOL 09900-20803: Thickness gauge

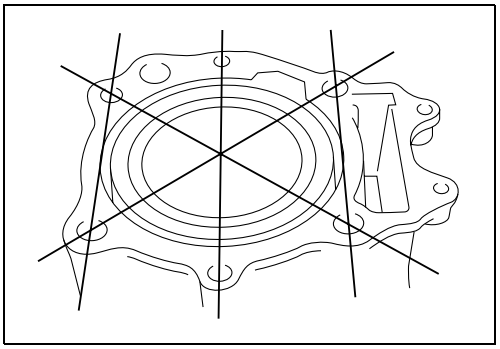

CYLINDER BORE DIAMETER INSPECTION

- Check that there is not abnormal surface damage or wear on the cylinder wall.
- At three positions, top, middle and bottom, measure the bore diameter. At each position, take two measurements, one parallel with and the other perpendicular to the crankshaft axis.

DATA Cylinder bore: Service Limit: 83.085 mm (3.27 in)

TOOL 09900-20508: Cylinder gauge set

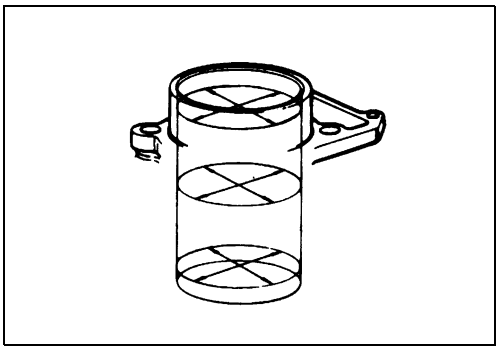

PISTON

PISTON DIAMETER INSPECTION

- Measure the piston outside diameter in the direction perpendicular to the piston pin axis at the height from the skirt as shown in the illustration using a micrometer.
- If the measurement is found less than the service limit, replace the piston.

DATA Piston diameter:
Standard: 82.950 – 82.965 mm (3.2657 – 3.2663 in)
Service Limit: 82.880 mm (3.2630 in)

TOOL 09900-20204: Micrometer (75 – 100 mm)

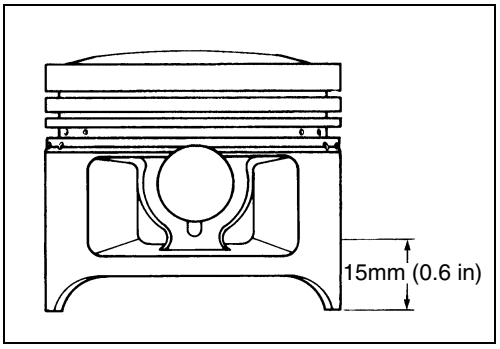

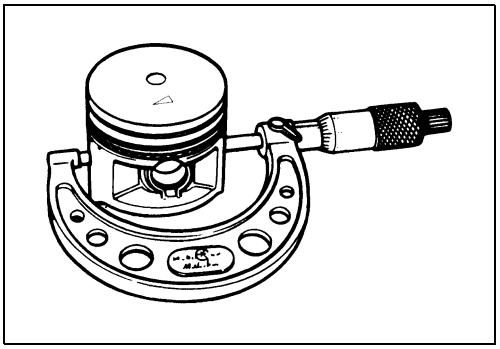

PISTON-TO-CYLINDER CLEARANCE

- To determine the piston-to-cylinder clearance, calculate the difference between the cylinder bore and the piston outside diameter.

DATA Piston-to-cylinderclearance:Service Limit:0.120 mm (0.005 in)

PISTON PIN BORE

- Using a small bore dial gauge, measure the piston pin bore both in the vertical and horizontal directions.
- If the measurement exceeds the service limit, replace the piston.

DATA Piston pin bore: Service Limit: 20.030 mm (0.789 in)

TOOL 09900-20602: Dial gauge (1/1 000 mm, 1 mm)
09900-22403: Small bore gauge (18 – 35 mm)

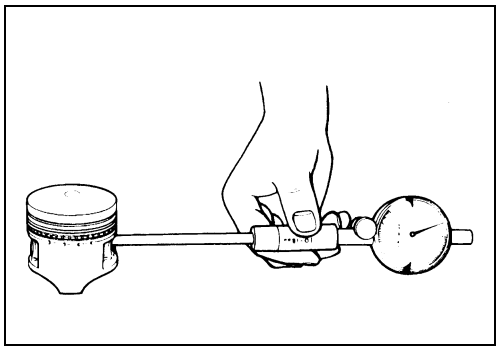

PISTON PIN DIAMETER INSPECTION

- Using a micrometer, measure the piston pin outside diameter at three positions, both the ends and the center.
- If any of the measurements is found less than the service limit, replace the pin.

DATA Piston pin O.D.: Service Limit: 19.980 mm (0.787 in)

TOOL 09900-20205: Micrometer (0 – 25 mm)

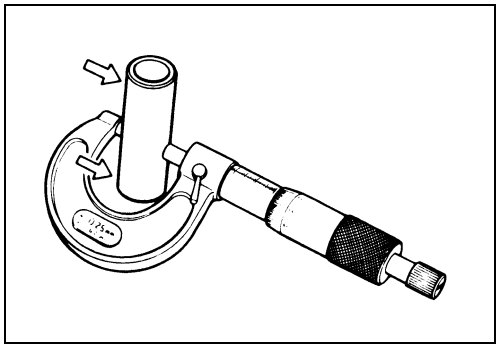

PISTON RING END GAP INSPECTION

- Insert the piston ring squarely into the cylinder using the piston head.
- Measure the end gap with a thickness gauge.
- If the gap exceeds the service limit, replace the piston ring.

DATA Piston ring end gap: Service Limit:(1st) 0.70 mm (0.03 in)
(2nd) 1.0 mm (0.04 in)

TOOL 09900-20803: Thickness gauge

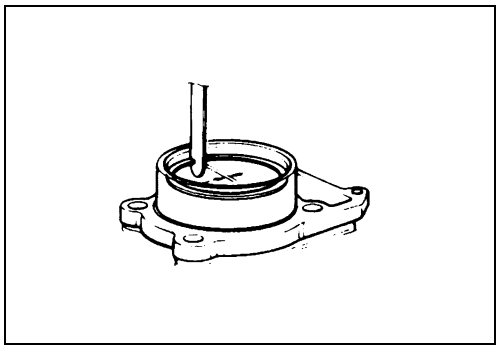

PISTON RING FREE END GAP INSPECTION

- Before installing piston rings, measure the free end gap of each ring using vernier calipers. If the gap is less than the service limit, replace the ring.

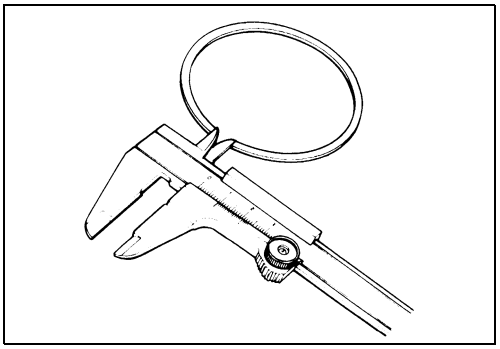

DATA Piston ring free end gap: Service Limit:(1st) 9.0 mm (0.35 in)
(2nd) 6.2 mm (0.24 in)

TOOL 09900-20102: Vernier calipers

PISTON RING-TO-GROOVE CLEARANCE INSPECTION

- Remove carbon deposit both from the piston ring and its groove.
- Fit the piston ring into the groove. With the ring compressed and lifted up, measure the clearance on the bottom side of the ring using a thickness gauge.

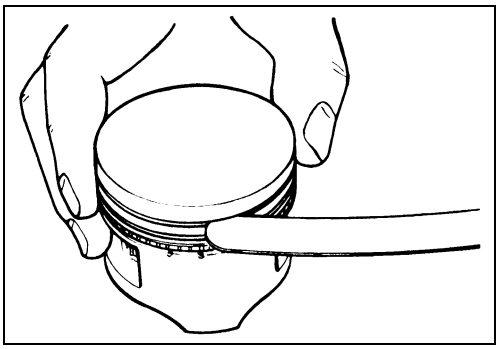

DATA Piston ring-to-Groove clearance:
Service Limit: (1st) 0.18 mm (0.007 in)
(2nd) 0.15 mm (0.006 in)

DATA Piston ring groove width:
Standard: (1st) 1.01 – 1.04 mm (0.0398 – 0.0409 in)
(2nd) 1.01 – 1.04 mm (0.0398 – 0.0409 in)
(Oil) 2.01 – 2.03 mm (0.0791 – 0.0799 in)

DATA Piston ring thickness:
Standard: (1st) 0.97 – 0.99 mm (0.0382 – 0.0390 in)
(2nd) 0.97 – 0.99 mm (0.0382 – 0.0390 in)

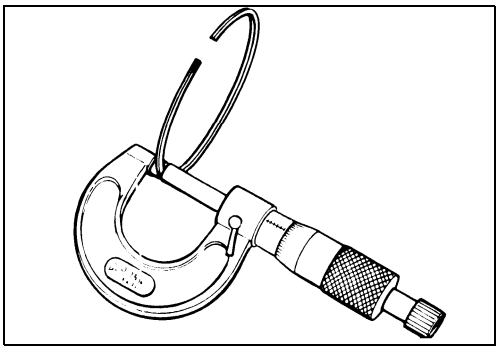

TOOL 09900-20803: Thickness gauge
09900-20205: Micrometer (0 – 25 mm)

CONROD AND CRANKSHAFT

CONROD SMALL END INSIDE DIAMETER INSPECTION

- Using a dial calipers, measure the conrod small end inside diameter both in vertical and horizontal directions. If any of the measurements exceeds the service limit, replace the conrod.

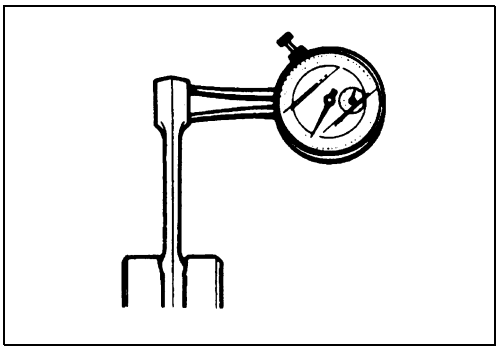

DATA Conrod small end I.D.: Service Limit: 20.040 mm (0.7890 in)

TOOL 09900-20605: Dial calipers (1/100 mm, 10 – 34 mm)

CONROD BIG END SIDE CLEARANCE INSPECTION

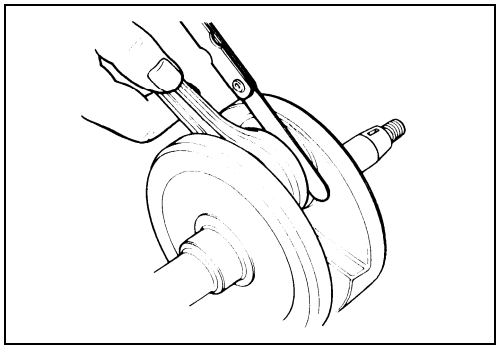

- Using a thickness gauge, measure the side clearance at the conrod big end. If the measurement is out of standard value, measure the conrod big end to determine, replace the conrod.

DATA Conrod big end side clearance:
Standard: 0.10 – 0.75 mm (0.004 – 0.030 in)

TOOL 09900-20803: Thickness gauge

DATA Conrod big end width: Standard:21.95 – 22.00 mm (0.864 – 0.866 in)

CONROD BIG END BEARING

- Check that the conrod turns smoothly without play and noise.

CONROD DEFLECTION INSPECTION

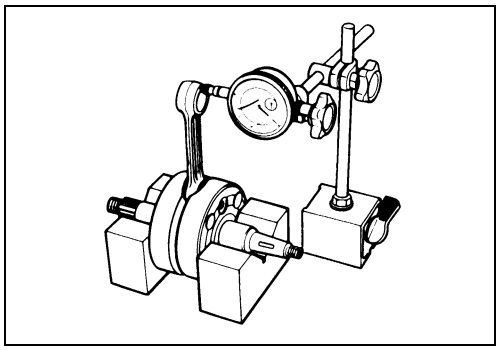

- Move the small end sideways while holding the big end immovable in thrust direction.
- Measure the amount of deflection.
- Turn the conrod and see if it moves smoothly without play and noise.
- This method can check the extent of wear on the parts of the conrod's big end.

DATA Conrod deflection: Service Limit: 3.0 mm (0.12 in)

TOOL 09900-20607: Dial gauge (1/100 mm)
09900-20701: Magnetic stand
09900-21304: V-block

CRANKSHAFT RUNOUT INSPECTION

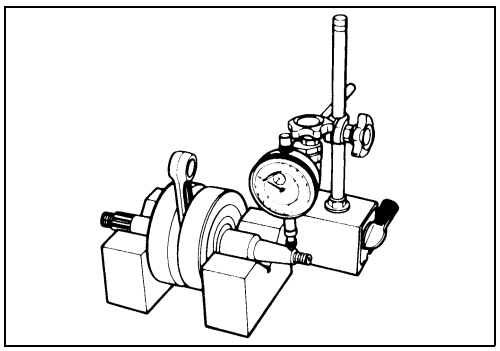

- With the right and left crank journals supported with V-block, turn the crankshaft slowly. At this time, measure the crankshaft end runout using a dial gauge. If the runout exceeds the service limit, replace the crankshaft.

DATA Crankshaft runout: Service Limit: 0.08 mm (0.003 in)

TOOL 09900-20607: Dial gauge (1/100 mm)
09900-20701: Magnetic stand
09900-21304: V-block

WIDTH BETWEEN CRANKSHAFT WEBS

- Measure the width between crankshaft webs Ⓐ.

DATA **Width between crankshaft webs Ⓐ:**
Standard: 59.9 – 60.1 mm (2.358 – 2.366 in)

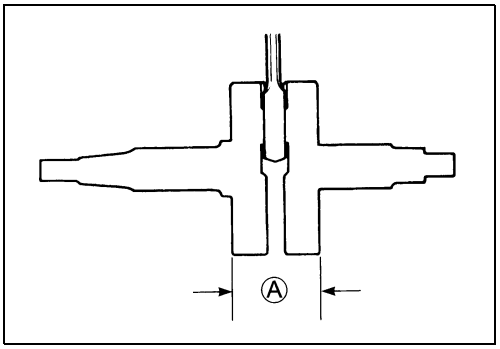

MOVABLE DRIVE FACE ASSEMBLY

OIL SEAL INSPECTION

- Remove the spacer ①.
- Check the lip of oil seal for any damage.
- If any defects are found, replace the oil seal with a new one.

- Check the drive face for any abnormal condition such as stepped wear or discoloration caused by burning.
- If any defeets are found, replace the movable drive face with a new one.

DISASSEMBLY

- Remove the movable drive face cover ①.

- Remove the movable drive face plate ②.
- Remove the dampers ③.

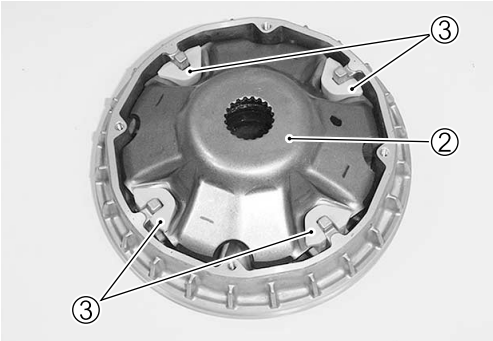

- Pull out the eight rollers ④.
- Remove the oil seals ⑤, ⑥.

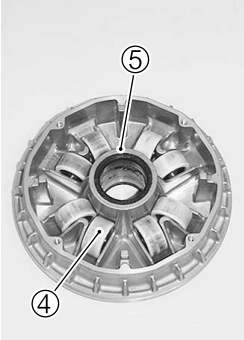

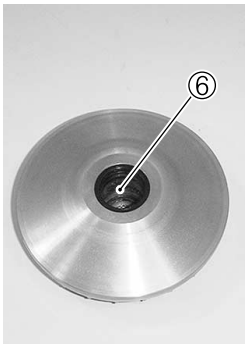

ROLLER INSPECTION

- Check that there is no abnormal wear or damage on the roller. Measure the diameter of roller with a vernier calipers. If the outside diameter measured is less than the standard value, replace the rollers as a set.

DATA Roller outside diameter:
Standard: 26.00 – 26.16 mm (1.02 – 1.03 in)

TOOL 09900-20102: Vernier calipers

REASSEMBLY

- Reaseembly the movable drive face in the reverse order of disassembly.
- Pay attention to the following points:
- Install the oil seal.
- Apply sufficient SUZUKI SUPER GREASE to the sliding sections of the movable drive face.
- Apply a small amount of SUZUKI SUPER GREASE to the bore and oil seal lip.

A H 99000-25010: SUZUKI SUPER GREASE "A" (Others)
99000-25030: SUZUKI SUPER GREASE "A" (USA)

CAUTION

*** Replace the oil seal with a new one.**
*** Wipe off excess grease thoroughly.**

- Position the eight rollers ① on the movable drive face.
- Mount the three dampers ② on the movable drive face plate ③.
- Position the movable drive plate on the movable drive face.

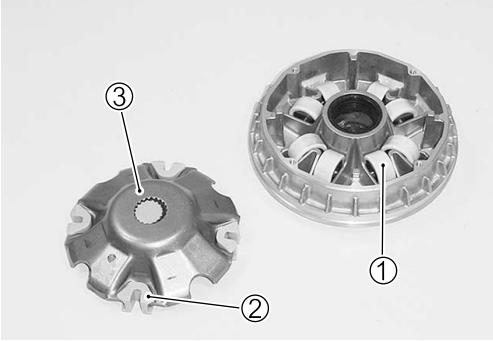

- Install the oil seal ④.

CAUTION

Replace the oil seal with a new one.

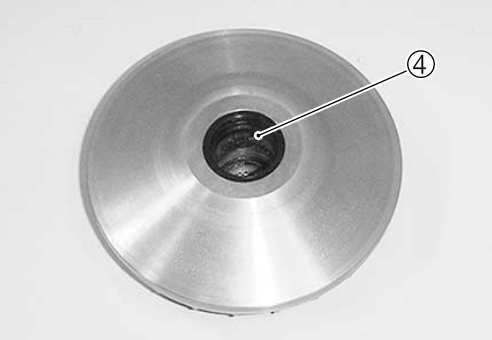

- Install the movable drive face cover ⑤.
- Install the spacer ⑥.

CAUTION

Press down the movable drive face plate so as not to cause the roller to come out of the position when inserting the spacer.

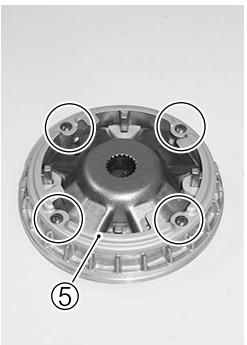

CLUTCH SHOE/MOVABLE DRIVEN FACE

DISASSEMBLY

- Hold the clutch shoe with the special tool and loosen the clutch shoe nut ①.

CAUTION

Do not remove the clutch shoe nut before attaching the clutch spring compressor.

TOOL 09940-92440: Wrench set
09930-40131: Attachment
09930-40113: Roter holder

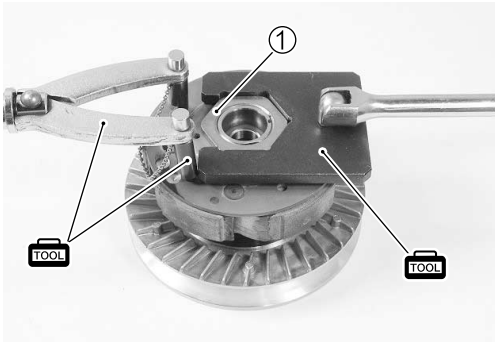

- Attach the special tool to the clutch shoe/movable driven face assembly and compress the clutch shoe/movable driven face assembly by turning in the special tool handle.
- Remove the clutch shoe nut ②.

TOOL 09922-31420: Clutch spring compressor

CAUTION

Since a high spring force applies to the clutch shoe assembly, care must be used so as not to cause the clutch shoe assembly and movable driven face to come off abruptly.

- Loosen the special tool handle Ⓐ slowly and remove the clutch shoe assembly.

CAUTION

Do not attempt to disassemble the clutch shoe assembly.

- To remove the movable driven face seat ③, use a thin brade screwdriver.

- Remove three pins ④ together with rollers.

- Remove the rollers ⑤ from the pins.

- Remove the movable driven face ⑥ from the fixed driven face.

- Remove the O-rings ⑦ and oil seal ⑧.

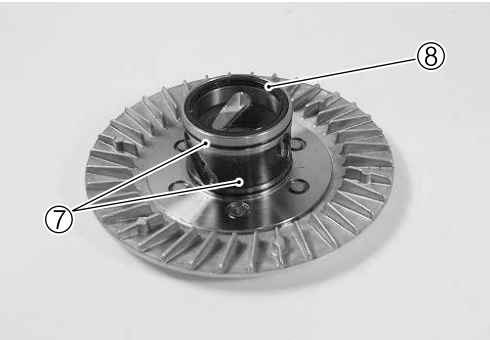

- Remove the oil seal ⑨.

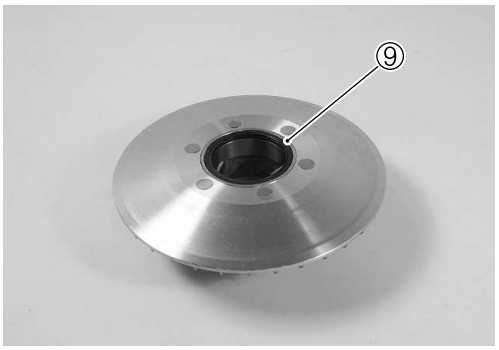

- Drive out the needle roller bearing ⑩ using a steel rod.

NOTE:
If abnormal noise does not occur, it is not necessary to remove the bearing.

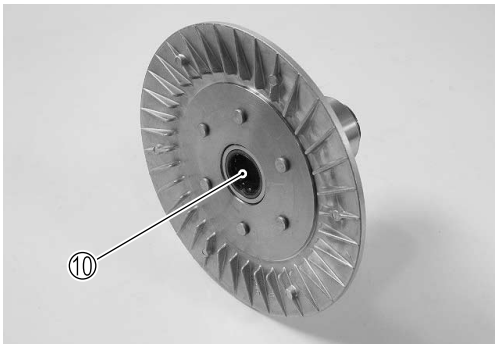

- Remove the circlip ⑪.
- Remove the bearing ⑫ using the special tool.

TOOL 09913-70210: Bearing installer set (30 mm)

NOTE:
If abnormal noise does not occur, it is not necessary to remove the bearing.

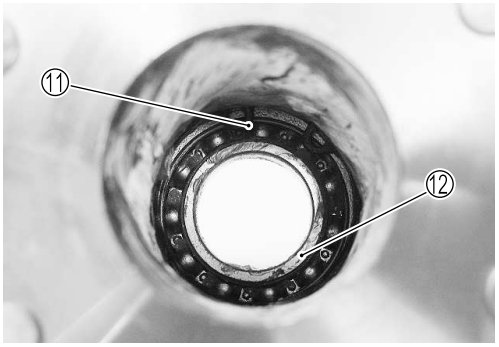

CLUTCH SHOE INSPECTION

- Check the boss and centrifugal weight fulcrum sections for looseness,damage and operation.
- Check the clutch shoe for damage and fouling with oil on the surface.

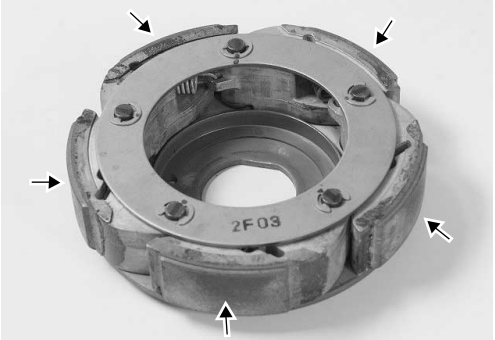

- Measure the thickness of clutch shoe at the center position. If the thickness is smaller than the the service limit, replace the shoe assembly with a new one.

DATA Clutch shoe thickness: Service Limit: 2.0 mm (0.08 in)

TOOL 09900-20102: Vernier calipers

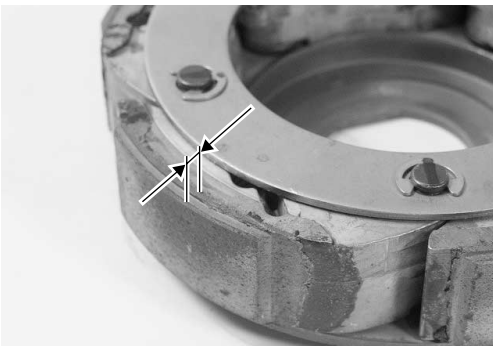

MOVABLE DRIVEN FACE SPRING INSPECTION

- Measure the spring free length using the vernier calipers.
- If the length is shorter than the service limit, replace the spring with a new one.

DATA Movable driven face spring free length:
Service Limit: 118.7 mm (4.67 in)

TOOL 09900-20102: Vernier calipers

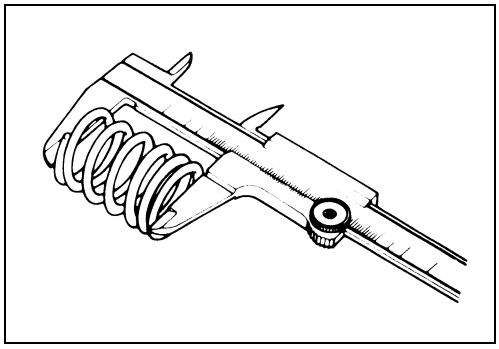

REASSEMBLY

- Reassembly the clutch shoe/movable driven face in the reverse order of disassembly.
- Pay attention to the following points:
- Install the bearing ① to the fixed driven face ② using the special tool.

TOOL 09913-70210: Bearing installer set (32 × 35 mm)

CAUTION

Position the sealed side of the bearing toward out side.

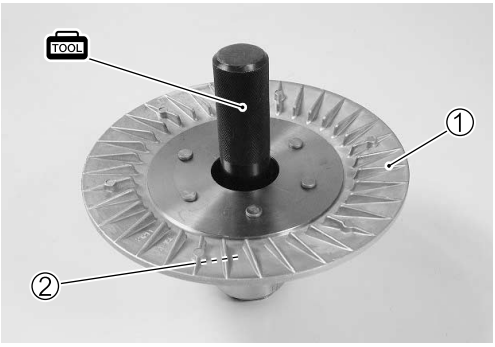

- Install the circlip ③.

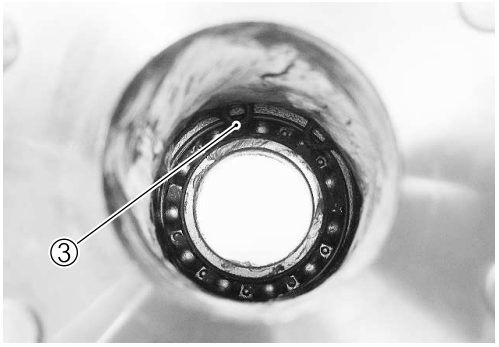

- Install the needle bearing ④ using the special tool.

09913-70210: Bearing installer set (37 × 40 mm)

CAUTION

> *** Position the needle bearing with its punch mark outside.**
> *** Apply sufficient grease both to the grease groove and needle bearing inside the fixed driven face.**

99000-25010: SUZUKI SUPER GREASE "A" (Others)
99000-25030: SUZUKI SUPER GREASE "A" (USA)

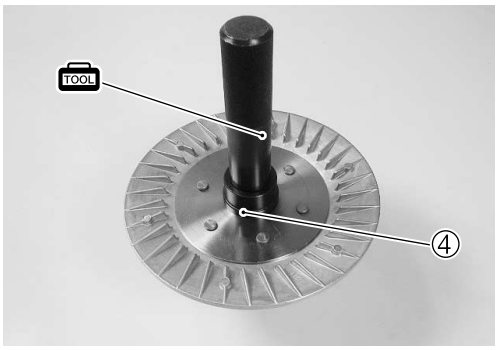

- Install the oil seals ⑤ to both sides of the movable driven face ⑥ until the stopper is contacted.

09913-70210: Bearing installer set (62 ×68 mm)

CAUTION

> **Replace the oil seal with a new one.**

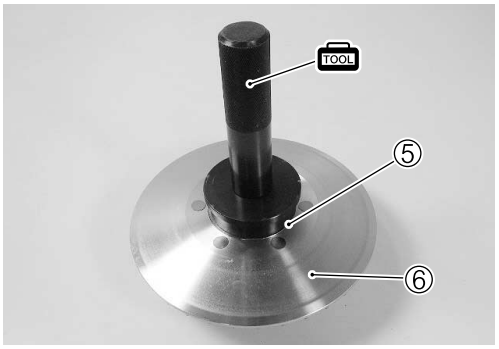

- Install the oil seal ⑦.

09913-70210: Bearing installer set (62 ×68 mm)

CAUTION

> *** Position the oil seal so that the stamped code toward outside.**
> *** Apply sufficient grease to both the oil seal lips all around and the grease groove inside the movable driven face.**
> *** Replace the oil seal with a new one.**

99000-25010: SUZUKI SUPER GREASE "A" (Others)
99000-25030: SUZUKI SUPER GREASE "A" (USA)

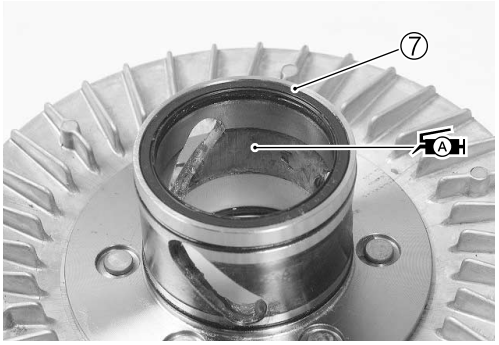

- Install the movable driven face ⑧ onto the fixed driven face ⑨.

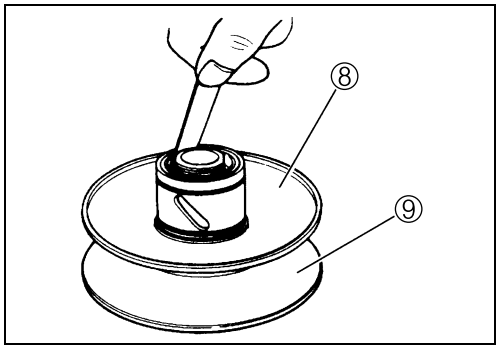

CAUTION

To prevent the oil seal lip from damaged during installation, slide the lip using a piece of 0.1 mm (0.004 in) thick steel sheet as a guide.

- Install the new O-rings ⑩, ⑪.

CAUTION

Replace the O-rings with new ones.

- Install the pin ⑫ to the pin hole together with the roller ⑬.
- Apply a small amount of SUZUKI SUPER GREASE to the O-ring and pin hole.

99000-25010: SUZUKI SUPER GREASE "A" (Others)
99000-25030: SUZUKI SUPER GREASE "A" (USA)

- Install the movable driven face seat ⑭.

- Install the spring ⑮ and clutch shoe assembly ⑯ onto the movable driven face ⑰ and attach the special tool.

09922-31420: Clutch spring compressor

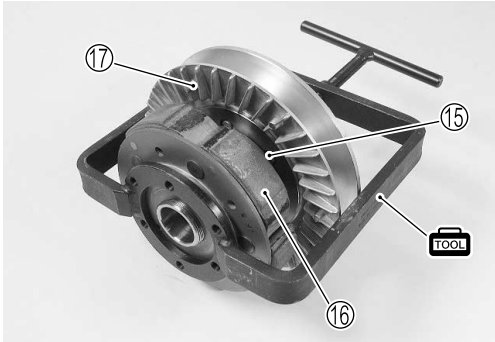

- Slowly turn the special tool handle to tighten and align the flats Ⓐ at the movable driven face end with clutch shoe plate hole.

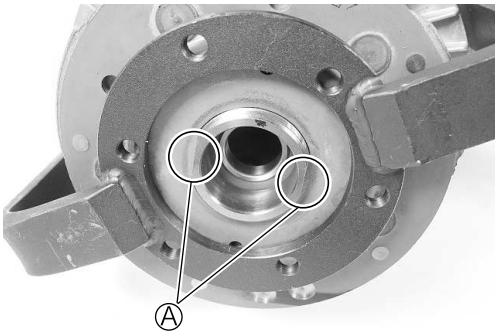

- Tighten the clutch shoe nut ⑱ temporarily.
- Remove the special tool from the clutch shoe/movable driven face assembly.

- Hold the clutch shoe with the special tool and tighten the clutch shoe nut using the special tool to the specified torque.

TOOL 09940-92440: Wrench set
09930-40131: Attachment
09930-40113: Rotor holder

Clutch shoe nut: 105 N·m (10.5 kgf-m, 76 lb-ft)

TRANSMISSION COVER

DISASSEMBLY

- Remove the driveshaft ① from the transmission cover ② and washer ③.
- Remove the O-ring ④.

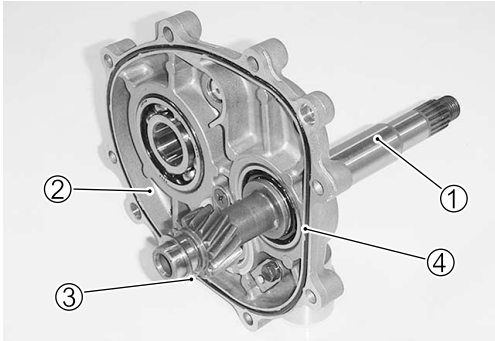

- Remove the oil seal ⑤ using the special tool.

TOOL 09913-50121: Oil seal remover

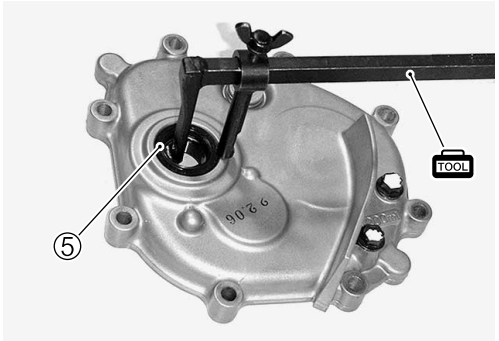

- Remove the bearing retainer ⑥.

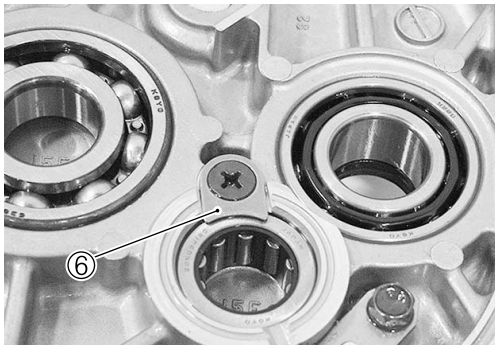

- Remove the bearings ⑦, ⑧ using the special tool.

TOOL 09921-20240: Bearing remover set(⑦ 20 mm)
(⑧ 25 mm)

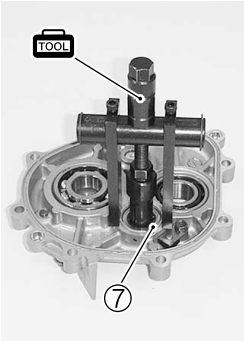

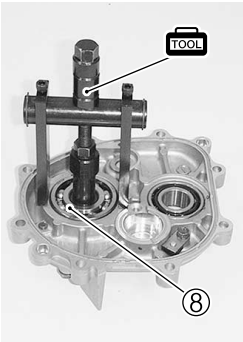

- Remove the bearing ⑨ using the special tool.

TOOL 09913-70210: Bearing installer set (32 × 35 mm)

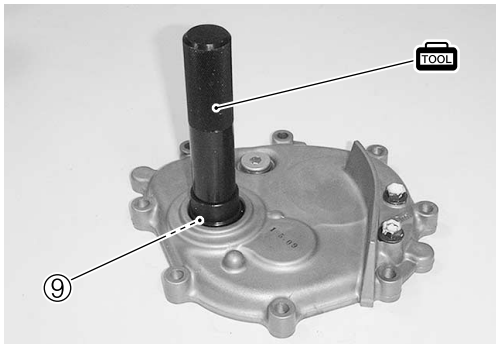

- Remove the magnet ⑩.
- Clean the magnet with a cleaning solvent.

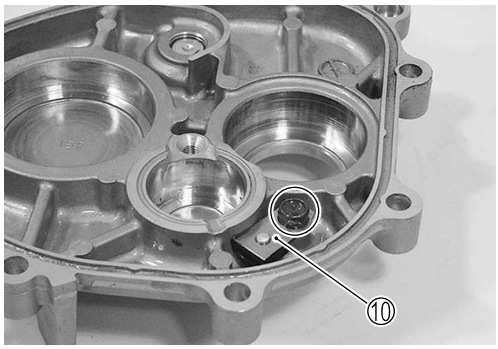

- Remove the drain plug ⑪, oil level plug ⑫ and oil filler plug ⑬.

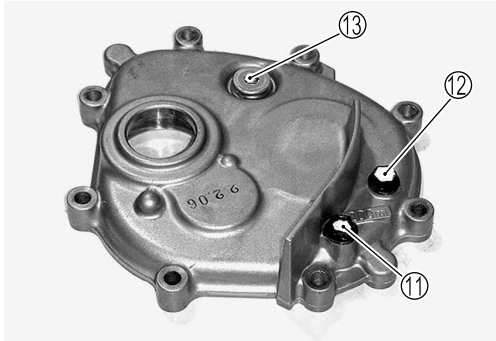

REASSEMBLY

- Reassembly the bearing and oil seal in the reverse order of disassembly.
- Pay attention to the following points:
- Tighten the oil drain plug ①, oil level bolt ②, and oil filler bolt ③ to the specified torque.

Oil drain bolt: 12 N·m (1.2 kgf-m, 8.5 lb-ft)
Oil level bolt: 12 N·m (1.2 kgf-m, 8.5 lb-ft)
Oil filler bolt: 12 N·m (1.2 kgf-m, 8.5 lb-ft)

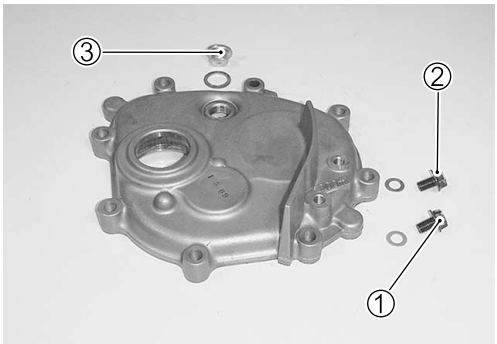

- Install the bearing ④ using the special tool.

TOOL 09913-70210: Bearing installer set (35 mm)

CAUTION

Replace the bearing with a new one.

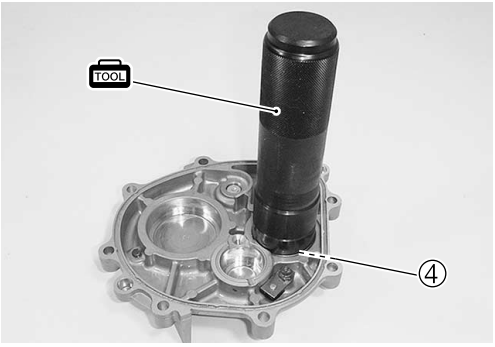

- Install the bearings ⑤, ⑥ using the special tool.

TOOL 09913-70210: Bearing installer set (⑤ 62 × 68 mm)
(⑥ 32 × 35 mm)

CAUTION

Replace the bearings with new ones.

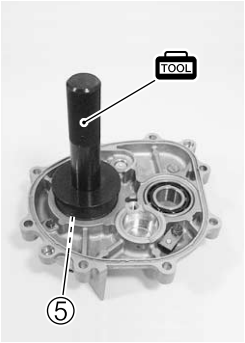

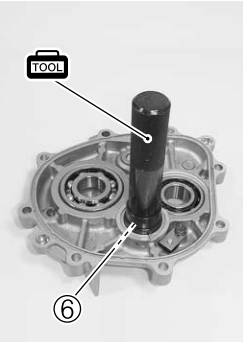

- Install the oil seal ⑦ using the special tool.

TOOL 09913-70210: Bearing installer set (37 × 40 mm)

CAUTION

Replace the oil seal with a new one.

IDLE GEAR

DISASSEMBLY

- Remove the circlip ①.

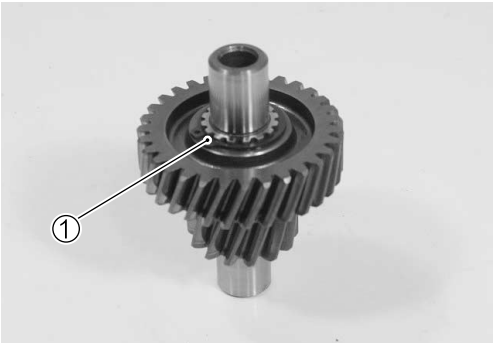

- Remove the idle gear ② from the idle shaft ③.

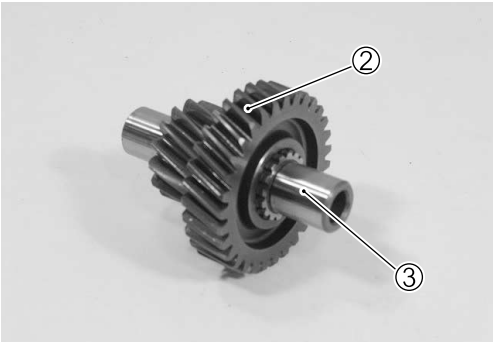

REASSEMBLY
- Reassemble the idle gear in the reverse order of disassembly.

FINAL DRIVEN GEAR

DISASSEMBLY
- Remove the circlip ①.
- Slide out the final driven gear ②.

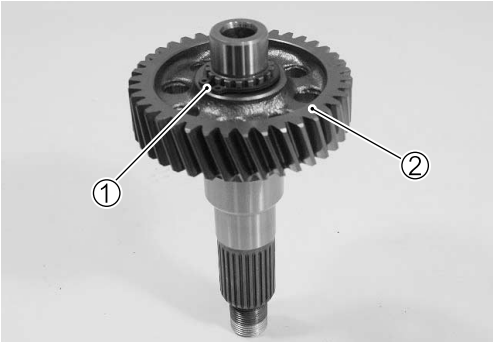

- Remove the circlip ③ from the rear axle shaft ④.

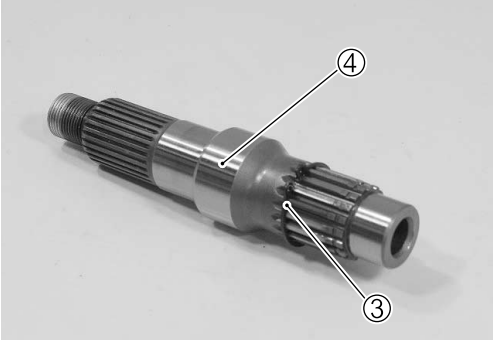

REASSEMBLY
- Reassemble the final driven gear in the reverse order of disassembly.
- Pay attention to the following points:
- Assemble the final driven gear ① with the thicker flange side Ⓐ facing outside.

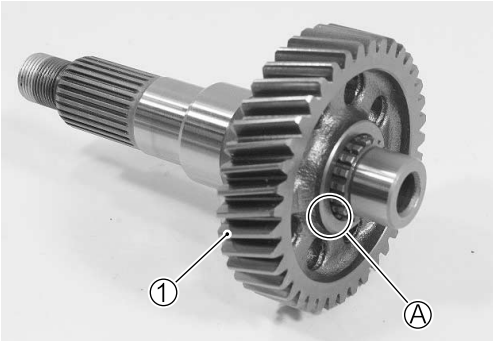

SCISSORS GEAR

DISASSEMBLY
- Remove the circlip ① and washer ②.
- Remove the spring washer ③.
- Remove the washer ④.

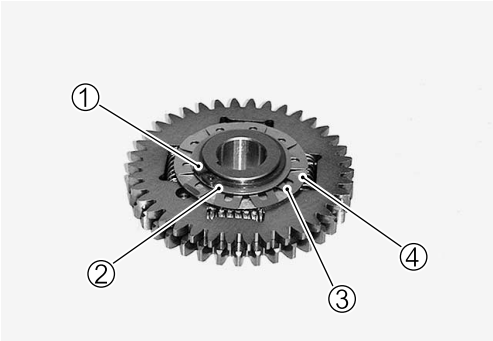

- Remove the springs ⑤.
- Remove the scissors gear ⑥.

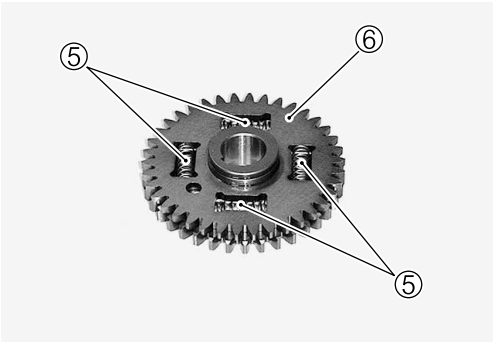

REASSEMBLY

- Reassemble the scissors gear in the reverse order of disassembly.
- Pay attention to the following points:
- Assemble the scissors gear with its stamp mark side Ⓐ facing inside.
- When assembling, align the balancer driven gear hole Ⓑ with the scissors gear hole Ⓒ.

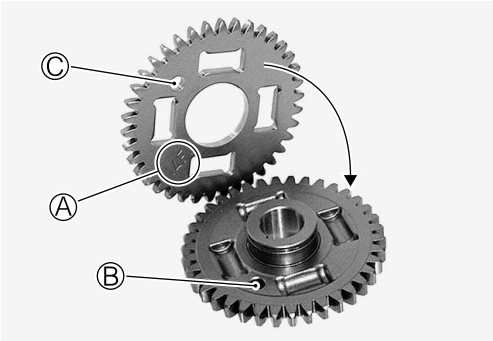

- Install the springs ①.
- Install the washers ②, ③ and spring washer ④.
- Install the circlip ⑤.

CAUTION

Install the spring washer ④ with the convex side facing outside.

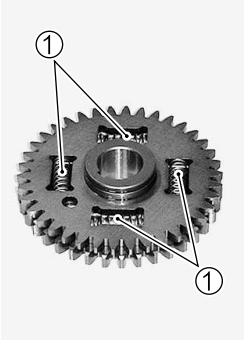

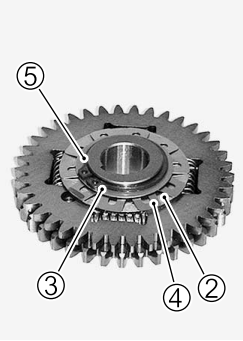

CLUTCH HOUSING INSPECTION

- Check for any abnormal surface damage.
- Measure the inside diameter of the clutch housing.
- If the measurement exceeds the service limit, replace the housing with a new one.

DATA Clutch housing I.D.: Service Limit: 135.5 mm (5.33 in)

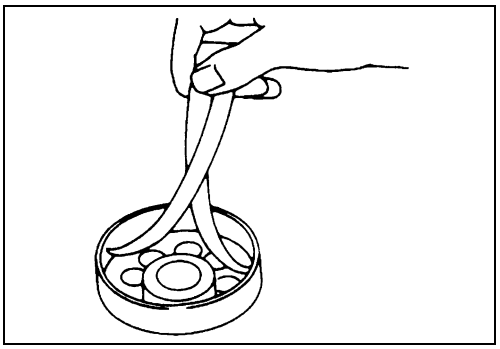

CLUTCH INNER COVER

DISASSEMBLY

- Remove the bearing retainer ①.

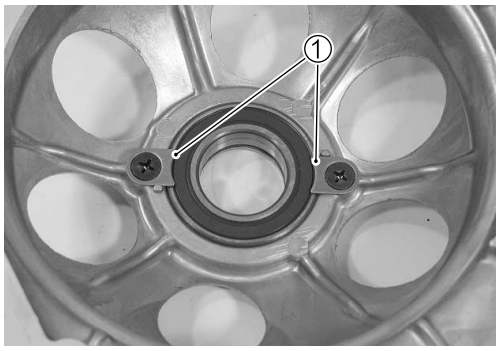

- Remove the bearing ② using the special tool.

TOOL 09921-20240: Bearing remover set (35 mm)

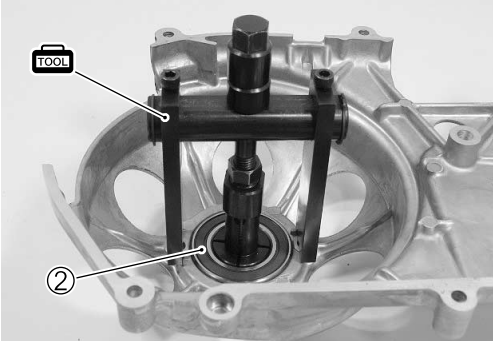

REASSEMBLY

- Reassemble the bearing in the reverse order of removal.
- Pay attention to the following points:
- Install the bearing using the special tool.

TOOL 09913-70210: Bearing installer set (62 × 68 mm)

DRIVE V-BELT INSPECTION

- Check that the drive V-belt is free from any greasy substance.
- Check the contact surface for crack or other damage.
- Measure the width Ⓐ of the belt using the vernier calipers.
- If the measurement exceeds the service limit or crack or other damage exists, replace the belt with a new one.

DATA Dride V-belt width: Service Limit: 20.85 mm (0.82 in)

TOOL 09900-20102: Vernier Calipers

CAUTION

If grease or oil is present on the surface, degrease the belt thoroughly.

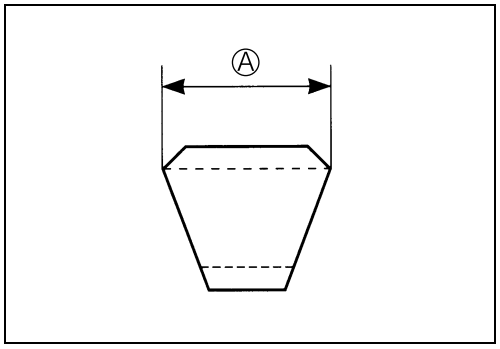

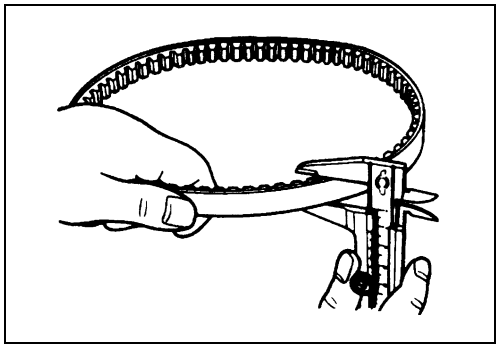

STARTER CLUTCH

INSPECTION OF STARTER CLUTCH OPERATION

- Turn the starter driven gear by hand in the directioin of arrow as shown and check that rotation is smooth. Also check that the gear is locked when attempted to turn in the other direction.
- If a large resistance is felt or noise occurs when turning the gear, check the starter driven gear sliding surface for wear or damage.
- If any abnormal condition is found, replace the starter clutch with a new one.

DISASSEMBLY

- With the rotor held with a wrench,loosen the strater clutch bolt.

- Remove the one-way clutch guide ① and one-way clutch ② from the rotor.

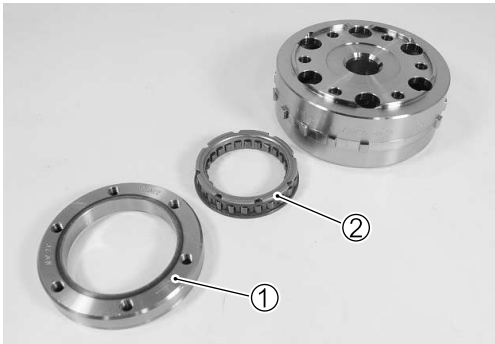

REASSEMBLY

- Reassemble the starter clutch in the reverse order of disassembly.
- Pay attention to the following points:
- When inserting the one-way clutch ① into the one-way clutch guide ②, the flange side Ⓐ must be positioned on the rotor side Ⓑ.

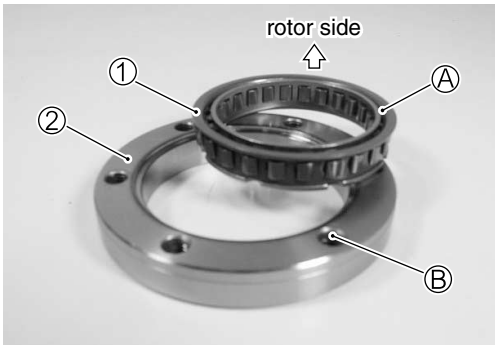

- Apply THREAD LOCK on the starter clutch bolts and tighten them to the specified torque.

Starter clutch bolt: 25 N·m (2.5 kgf-m, 18.0 lb-ft)

1322 99000-32110: THREAD LOCK SUPER "1322" (Others)

1342 99000-32050: THREAD LOCK "1342" (USA)

CAUTION

After installing the starter driven gear,check that the clutch functions properly.

GENERATOR

DISASSEMBLY

- Remove the generator stator ①, CKP sensor ② and lead wire guide ③.

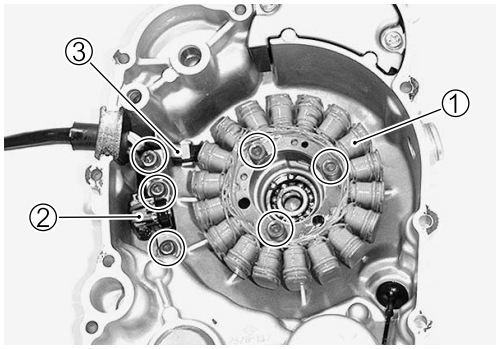

- Remove the circlip ④.

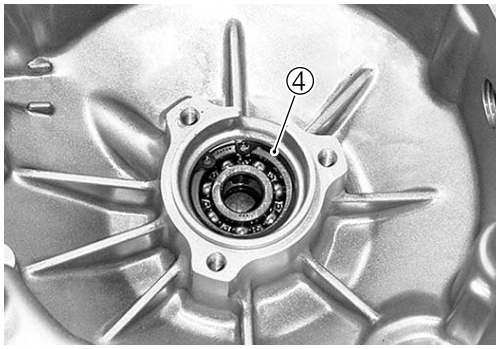

- Remove the bearing ⑤ using the special tool.

TOOL 09921-20240: Bearing remover set (12 mm)

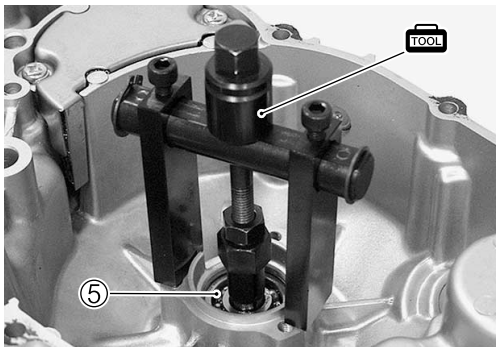

- Remove the oil seal ⑥.

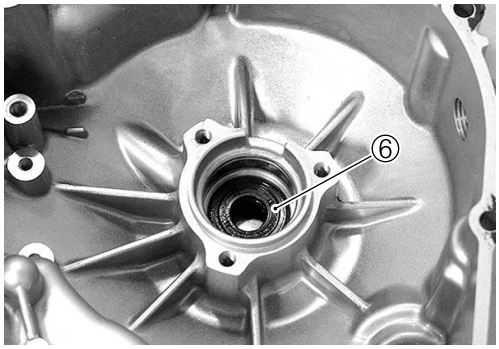

REASSEMBLY

- Reassemble the generator in the reverse order of disassembly.
- Pay attention to the following points:
- Install the oil seal ① using the special tool.

TOOL 09913-75821: Bearing installer

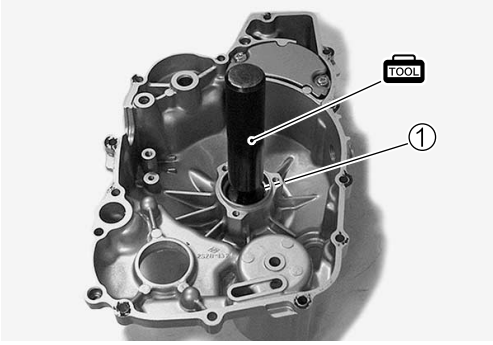

CAUTION

> *** Install the oil seal with the marked code toward outside.**
> *** Replace the oil seal with a new one.**

- Install the bearing ② using the special tool.

TOOL 09913-70210: Bearing installer set (32 × 35 mm)

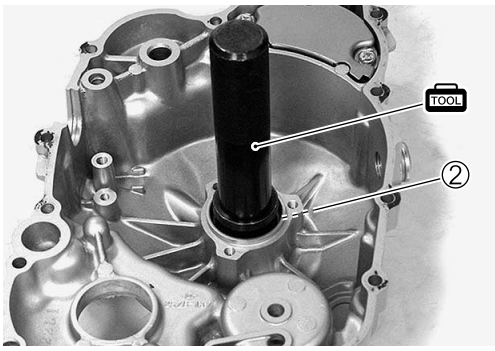

CAUTION

> **Replace the bearing with a new one.**

- Install the circlip.

- Install the generator stator into the generator cover.

CAUTION

> **Generator stator part Ⓐ on the convex part Ⓑ of the generator cover.**

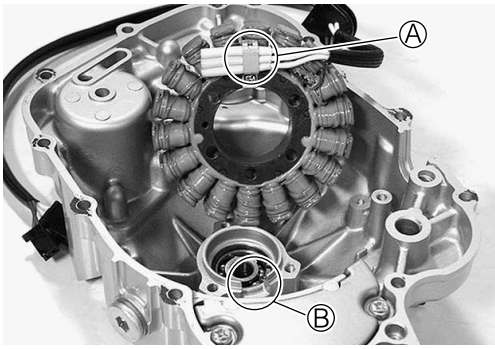

- Tighten the generator stator bolts ③ to the sepecified torque.

Generator stator bolt: 10 N·m (1.0 kgf-m, 7.0 lb-ft)

- Tighten the CKP sensor bolts ④ to the specified torque.

CKP sensor bolt: 5 N·m (0.5 kgf-m, 3.7 lb-ft)

- Tighten the lead wire guide bolt ⑤ to the specified torque.

Lead wire guide bolt: 10 N·m (1.0 kgf-m, 7.0 lb-ft)

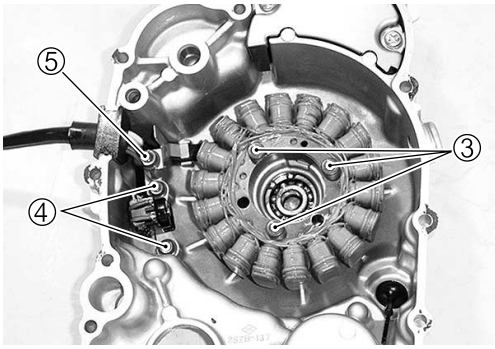

OIL SUMP FILTER

- Clean the oil sump filter.
- If oil sump filter for clogging and damage, replace it with a new one.

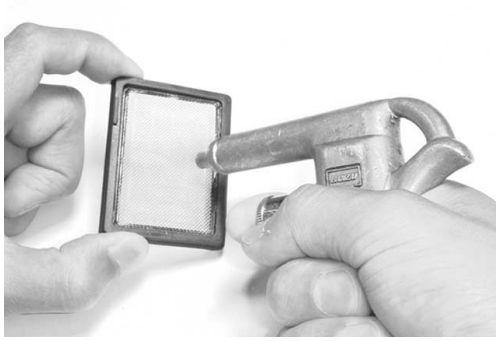

OIL PUMP

- Rotate the oil pump by hand and check that it moves smoothly.
- If it does not move smoothly, replace the oil pump assembly.

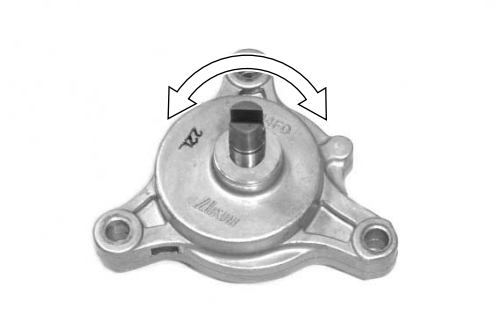

CRANKCASE

OIL NOZZLE REMOVAL

- Remove the oil nozzle ①.

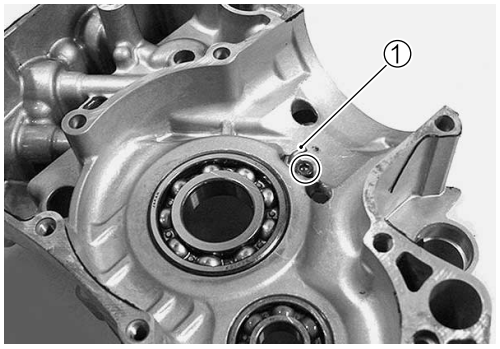

OIL NOZZLE INSPECTION

- Check the oil nozzle for clogging and damage.
- If any fault is detected, replace with a new one.

OIL NOZZLE REMOUNTING

- Install the O-ring ① to the oil nozzle ②.

CAUTION

Replace the O-ring with a new one.

- Install the oil nozzle ① to the crankcase.

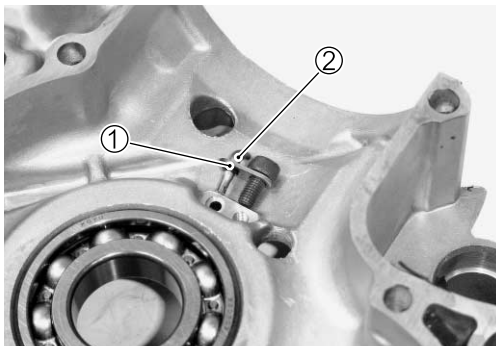

BEARING INSPECTION

- Rotate the bearing inner race by finger to inspect for abnormal play, noise and smooth rotation while the bearings are in the crankcase.
- Replace the bearing in the following procedure if there is anything unusual.

NOTE:
If abnormal noise does not occur, it is not necessary to remove the bearing.

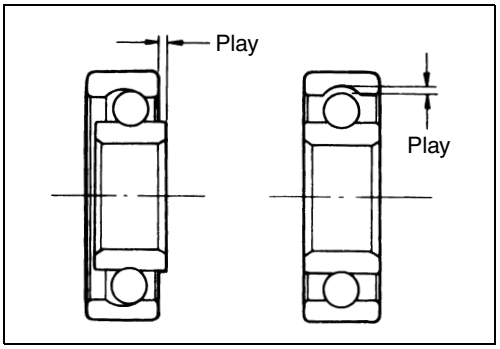

BEARING REMOVAL

- Remove the bearing ① using the special tool.

TOOL 09913-70210: Bearing installer set (30 mm)

- Remove the bearing ② using the special tool.

TOOL 09913-70210: Bearing installer set (42 × 47 mm)

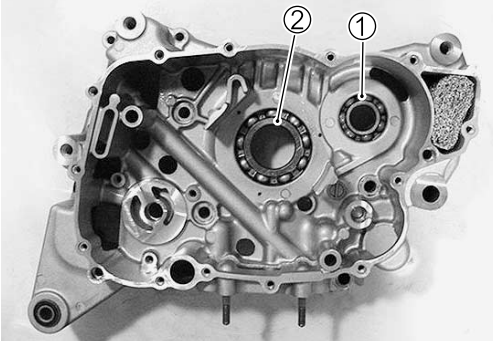

- Remove the bushing ③ using the special tool.

TOOL 09924-84521: Bearing installer set

NOTE:
To remove the bushing ④, use an appropriate size steel tube ⑤ such as a spacer.

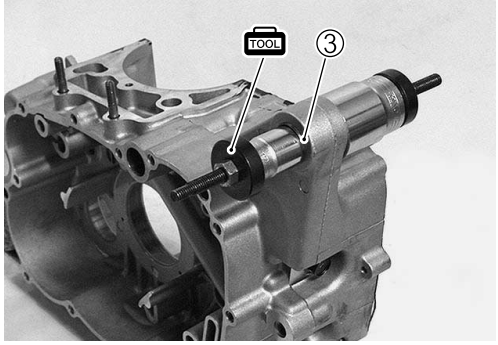

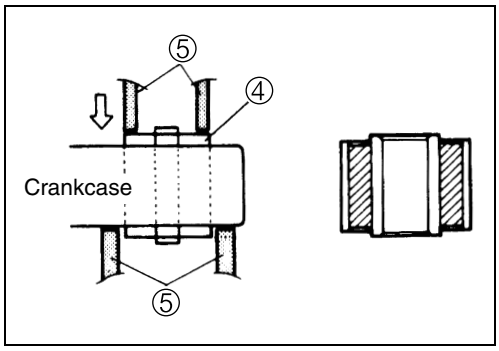

- Remove the oil seal ⑥ using the special tool.

TOOL 09913-50121: Oil seal remover

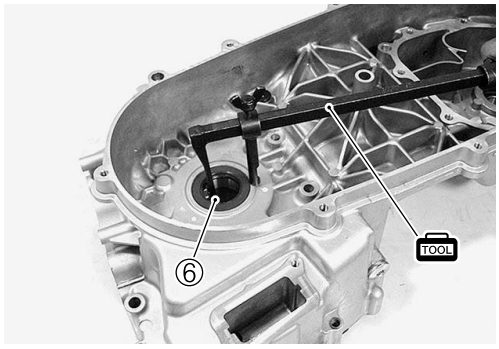

- Remove the bearing ⑦ using the special tool.

TOOL 09913-70210: Bearing installer set (42 × 47 mm)

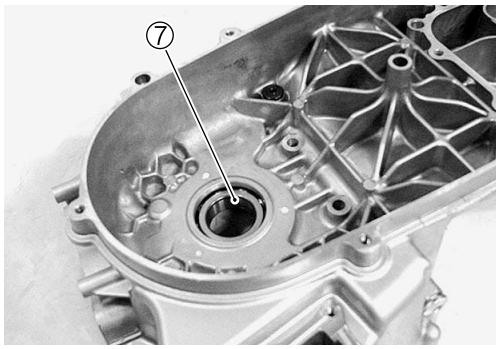

- Remove the bearing ⑧.

TOOL 09921-20240: Bearing remover set (20 mm)

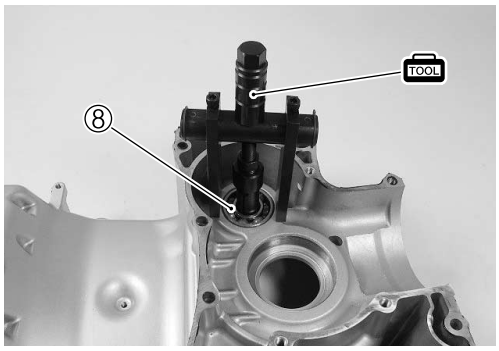

- Remove the bearing retainer ⑨.

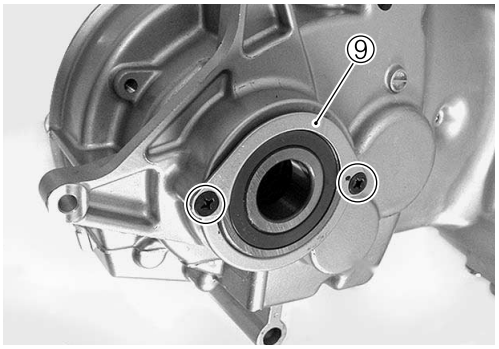

- Remove the bearing ⑩ using the special tool.

TOOL 09913-75830: Bearing installer

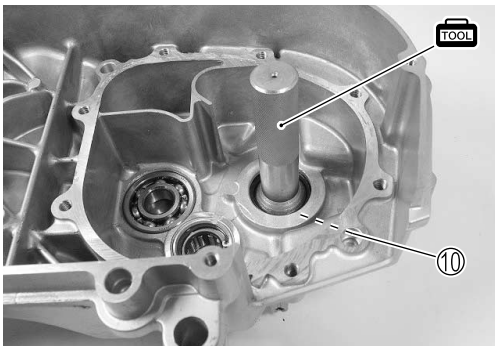

- Remove the oil seal ⑪ using the special tool.

TOOL 09913-50121: Oil seal remover

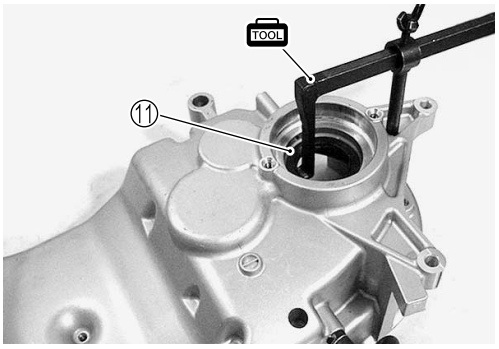

- Remove the circlip ⑫.

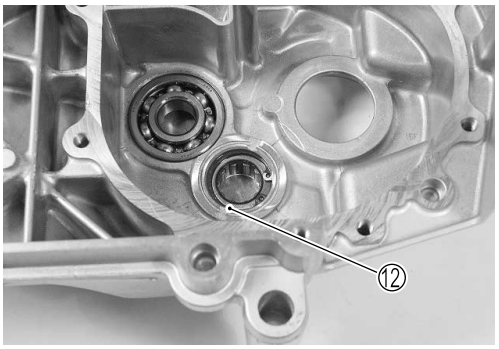

- Remove the two bearings ⑬, ⑭.

TOOL 09921-20240: Bearing remover set (20 mm)

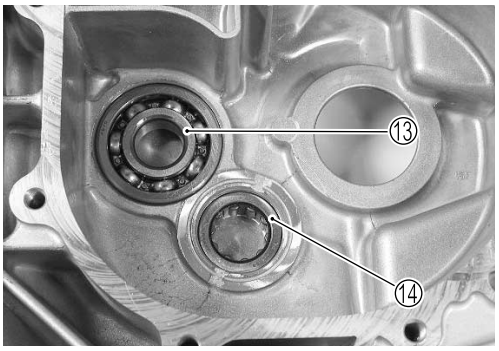

BEARING REINSTALLATION

- Install the bearings ①, ② using the special tool.

TOOL 09913-70210: Bearing installer set (① 72 × 75 mm)
(② 42 × 47 mm)

CAUTION

Replace the bearings with new ones.

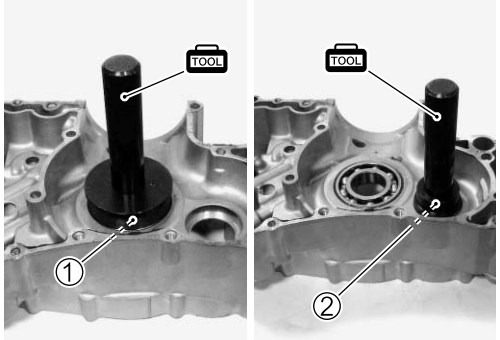

- Install the bearings ③, ④ using the special tool.

TOOL 09913-70210: Bearing installer set (③ 42 × 47 mm)
(④ 72 × 75 mm)

CAUTION

Replace the bearings with new ones.

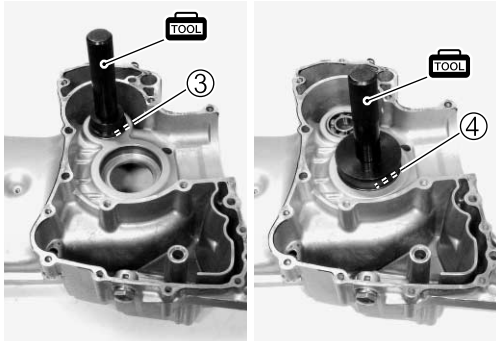

- Install the oil seal ⑤ using the special tool.

TOOL 09913-70210: Bearing installer set (62 × 68 mm)

- Apply SUZUKI SUPER GREASE to the oil seal lip.

99000-25010: SUZUKI SUPER GREASE "A" (Others)
99000-25030: SUZUKI SUPER GREASE "A" (USA)

CAUTION

Replace the oil seal with a new one.

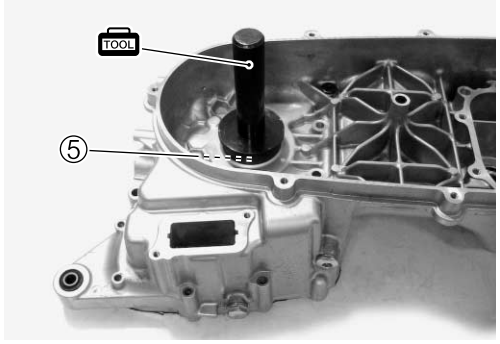

- Install the bearings ⑥, ⑦ using the special tool.

TOOL 09913-70210: Bearing installer set (⑥ 32 × 35 mm)
(⑦ 52 × 55 mm)

CAUTION

Replace the bearings with new ones.

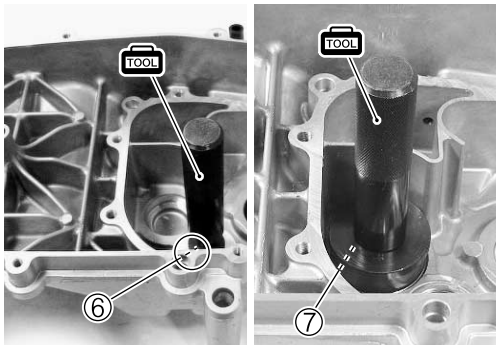

- Install the oil seal ⑧ using the special tool.

TOOL 09913-70210: Bearing installer set (52 × 55 mm)

- Apply SUZUKI SUPER GREASE to the oil seal lip.

99000-25010: SUZUKI SUPER GREASE "A" (Others)
99000-25030: SUZUKI SUPER GREASE "A" (USA)

CAUTION

Replace the oil seal with a new one.

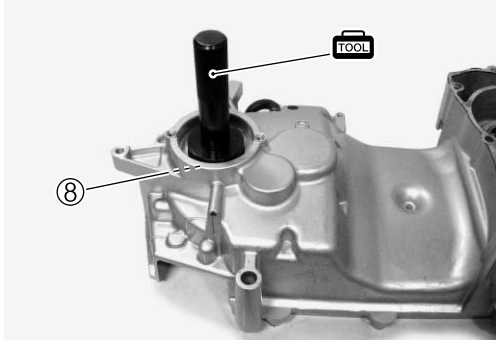

- Install the bearing ⑨ using the special tool.

TOOL 09913-70210: Bearing installer set (72 × 75 mm)

CAUTION

Replace the bearing with a new one.

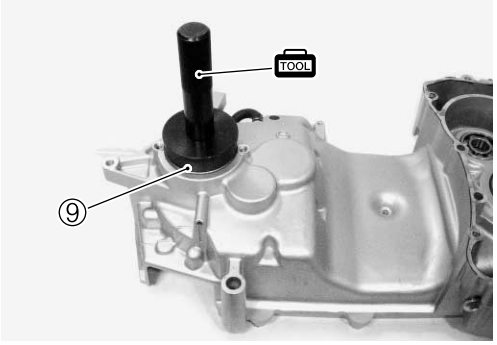

- Install the bearing retainer ⑩.

NOTE:
Install the bearing retainer toward the upper side Ⓐ of the engine.

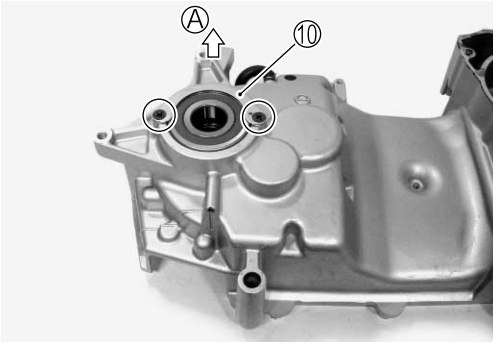

- Using a vice and a tube of appropriate size for outside diameter of the mounting bushing ⑪, press in the bushing.

TOOL 09924-84521: Bearing installer set

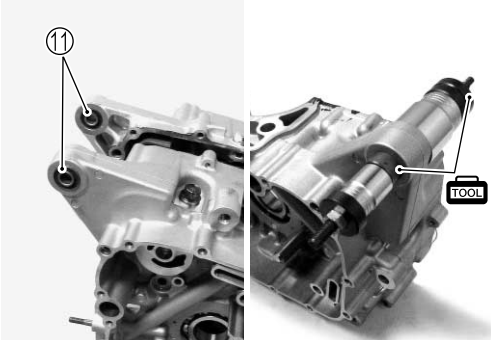

CAUTION

Press in the mounting bushing so that the end of outside Ⓐ shell becomes flush with the inside face Ⓑ of crankcase.

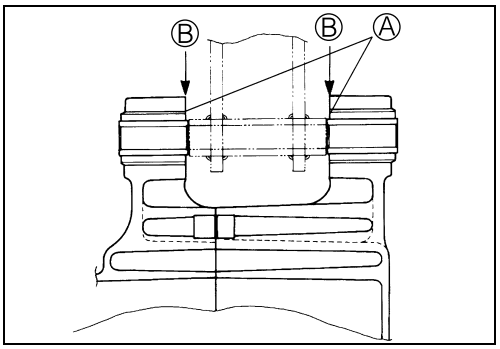

ENGINE REASSEMBLY

- Reassemble the engine in the reverse order of disassembly.
- Pay attention to the following point:

CAUTION

*** Make sure to coat the rotating and sliding sections with engine oil.**
*** Care must be taken so that the drive belt, drive face and driven face are completely free from oil and grease.**

CRANKSHAFT

- Using the special tool, press in the crankshaft into the left crankcase.

NOTE:
Fit steel plates between the crankcase and the special tool when installing the crankshaft with the special tool.

TOOL 09910-32812: Crankshaft installer
09910-32870: Attachment

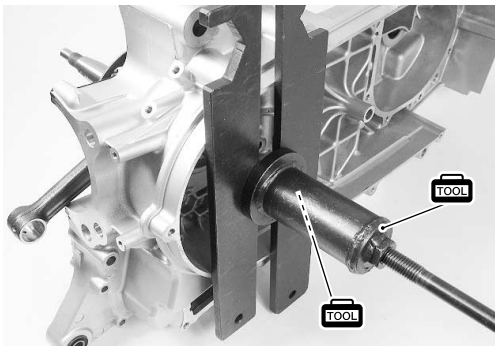

CAUTION

*** Do not hit the crankshaft with a plastic hammer or the like to install it into the crankcase.**
*** Be careful not to cause damage to the oil seal lip when pressing the crankshaft into the crankcase.**

BALANCER SHAFT

- Install the balancer shaft ①.

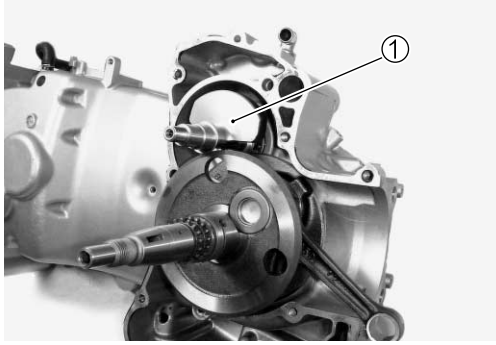

CRANKCASE

- Install the O-ring ①.

CAUTION

Replace the O-ring with new a one.

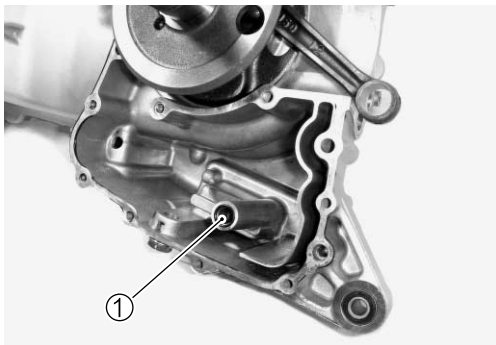

- Clean and degrease the crankcase mating surfaces(both surfaces)with a cleaning solvent.
- Fit the dowel pins ① into the left crankcase.

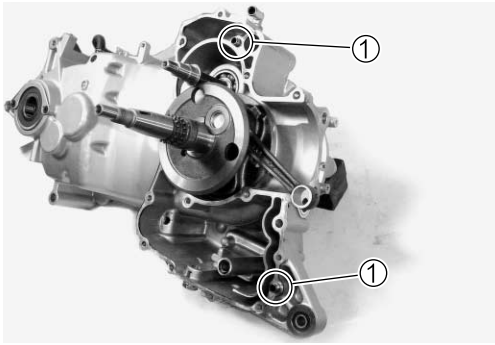

- Apply SUZUKI BOND to the right crankcase.

1215 99000-31110: SUZUKI BOND "1215" (Others)

1207B 99104-31140: SUZUKI BOND "1207B" (USA)

CAUTION

> *** Coat the sealant evenly without break.**
> *** Application of sealant must be performed within a short period of time.**
> *** Take extreme care not to let sealant enter into the oil hole or bearing.**

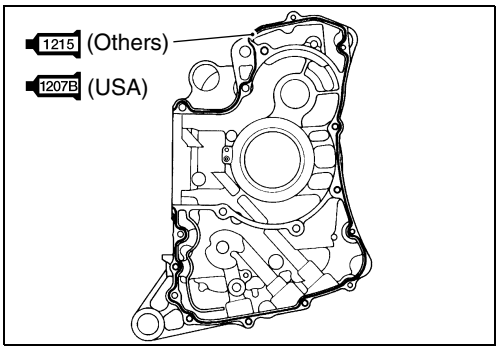

- Assemble the crankcases with in few minutes.

- Fit the gasket washer to the right crankcase bolts Ⓐ.

CAUTION

> **Replace the copper washer with a new one.**

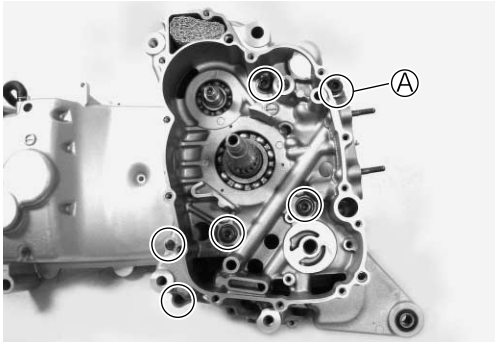

- Fit the gasket washers to the left crankcase bolts Ⓑ.

CAUTION

> **Replace the copper washers with new ones.**

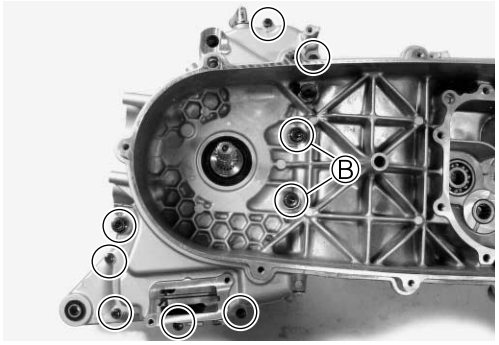

- Tighten the crankcase bolts(8mm)diagonally and evenly in two stages; initial tightening and final tightening.

Crankcase bolt

Initial tightening: 8 mm 13 N·m (1.3 kgf-m, 9.5 lb-ft)
Final tightening: 8 mm 22 N·m (2.2 kgf-m, 16.0 lb-ft)
6 mm 11 N·m (1.1 kgf-m, 8.0 lb-ft)

NOTE:
After crankcase bolts have been tightened, check it crankshaft rotate smoothly

BALANCER GEAR

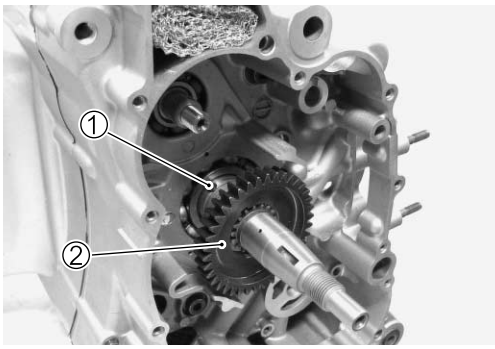

- Insert the pin ①.
- Install the balancer drive gear ②.

CAUTION

Make sure to align the slot of the balancer drive gear with the pin.

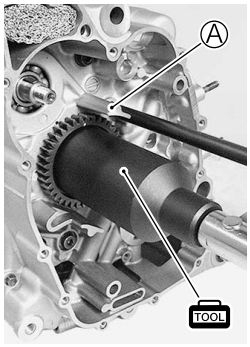

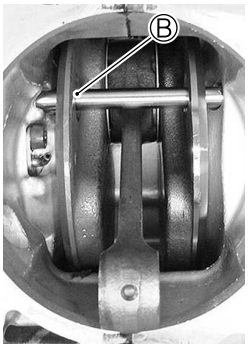

- Insert a proper steel rod into the crankcase hole Ⓐ and pass through the crankshaft wed holes Ⓑ in order to prevent the crankshaft from turning.
- Install the wave washer.

CAUTION

Pay attention to the direction of the wave washer.

- Using the special tool, tighten the balancer drive gear nut to the specified torque.

TOOL 09922-21410: Long socket (46 mm)

Balancer drive gear nut: 150 N·m (15 kgf-m, 11 lb-ft)

CAUTION

Pay attention to the direction of balancer drive gear nut.

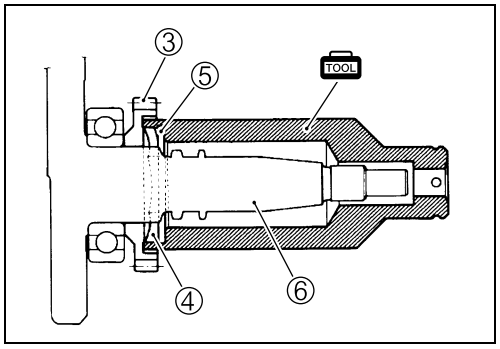

③ Balancer drive gear
④ Wave washer
⑤ Balancer drive gear unt
⑥ Crankshaft

- Fit the balancer shaft key ⑦ into key way.

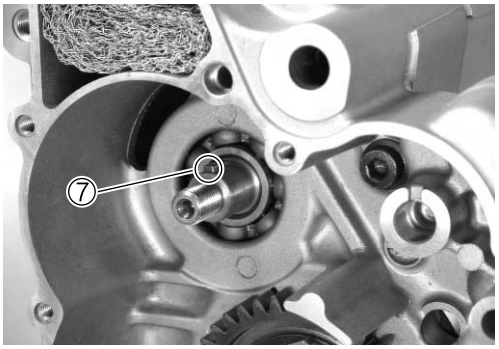

- When installing the balancer driven gear ⑧, align the punch mark Ⓒ on the balancer drive gear with the punch mark Ⓓ on the balancer driven gear.

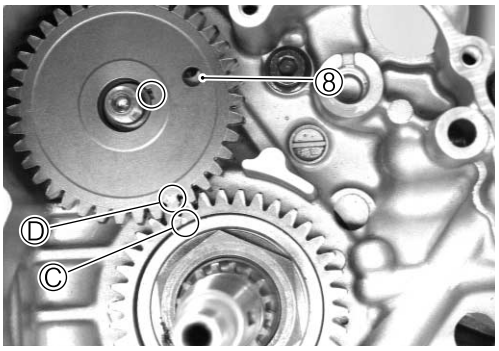

- Insert a steel rod into the scissors gear through the balancer driven gear and let the balancer driven gear teeth mesh with the balancer drive gear teeth.

CAUTION

> **Make sure that the punch mark Ⓔ on the balancer drive gear is aligned with the punch mark Ⓕ on the balancer driven gear.**

- Install the washer ⑨ and balancer driven gear nut ⑩.
- Lock the crankshaft by inserting a steel rod and tighten the balancer driven gear nut to the specified torque.

Balancer driven gear nut: 50 N·m (5.0 kgf-m, 36.0 lb-ft)

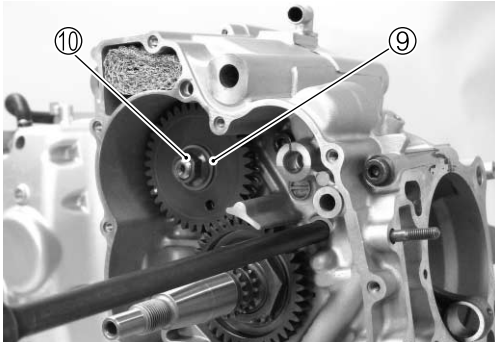

STARTER IDLE GEAR

- Install the starter idle gear ① onto the starter idle gear shaft ②.

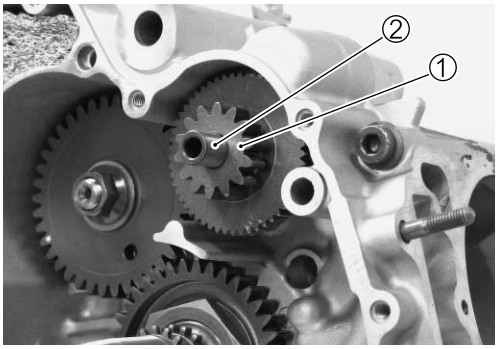

CAM CHAIN

- Install the cam chain ①.

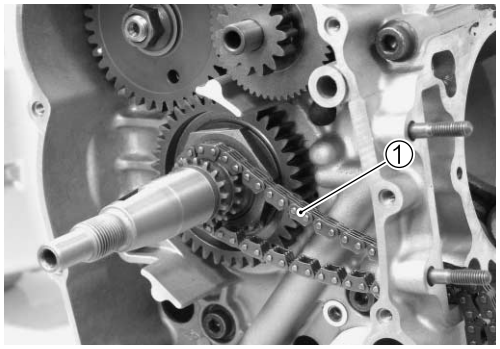

OIL PUMP

- Install the washer ① and pin ② to the oil pump.

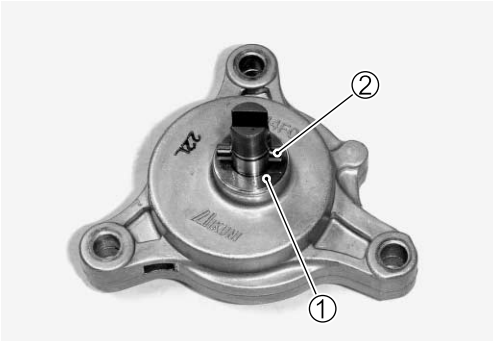

- Install the oil pump gear ③.
- Install the circlip ④.

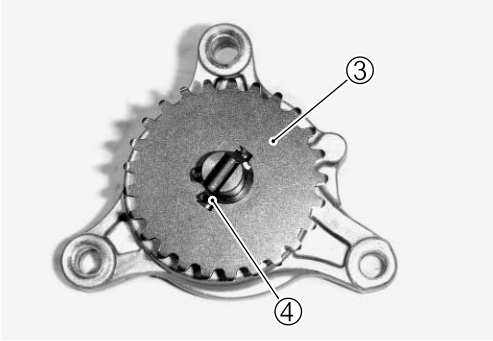

- Engage the chain ⑤ with the oil pump gear.

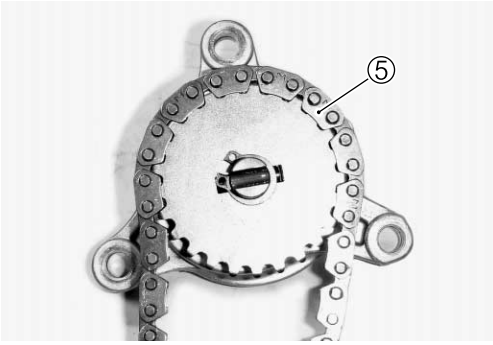

- With the other side of the chain ⑥ engaged with the crankshaft gear ⑦, install the oil pump on the crankcace.
- Tighten the oil pump bolts to the specified torque.

Oil pump bolt: 10 N·m (1.0 kgf-m, 7.0 lb-ft)

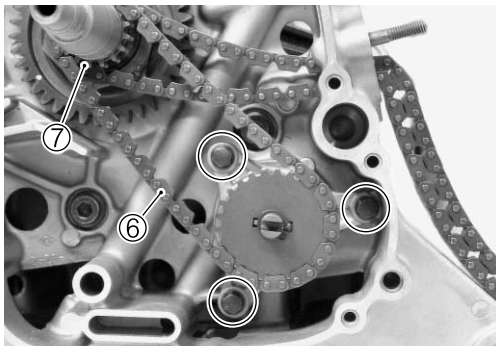

STARTER DRIVEN GEAR

- Install the starter driven gear ① and key ②.

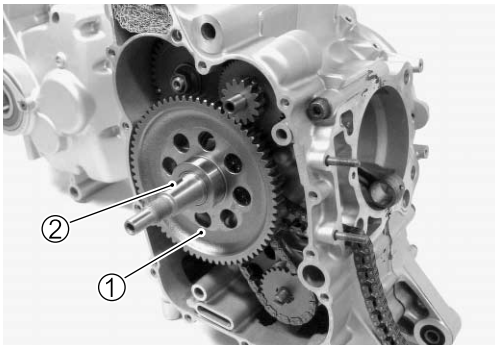

GENERATOR ROTOR

- Install the generator rotor ①.

NOTE:
Make sure to engage the starter clutch with the starter driven gear.

- Screw the generator rotor nut.
- With the generator rotor locked, tighten the generator rotor nut to the specified torque.

Generator rotor nut: 160 N·m (16.0 kgf-m, 115.5 lb-ft)

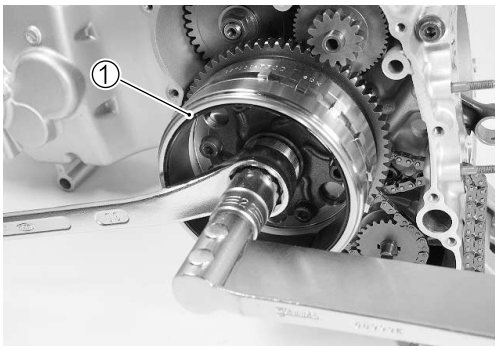

OIL SUMP FILTER

- Install the O-ring ① to the oil sump filter cap ②.

CAUTION

Replace the O-ring with a new one.

- Insert the oil sump filter ③.

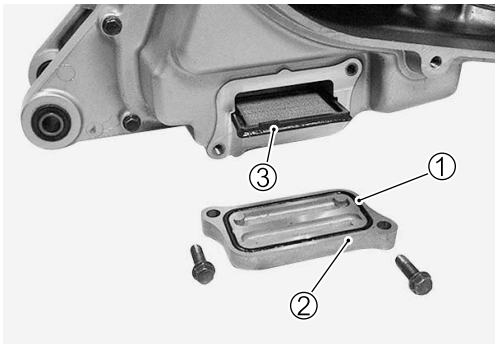

CAUTION

*** The lip Ⓐ of the oil sump filter should be positioned downward.**
*** The thinner side Ⓑ of the oil sump filter should be positioned inside.**

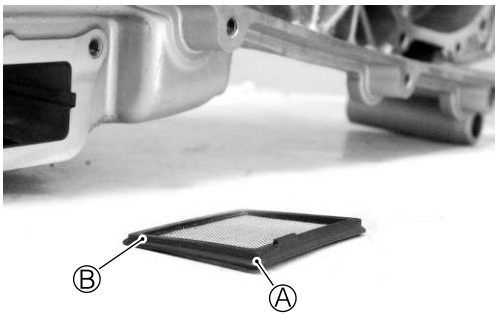

- Install the oil sump filter cap ④.

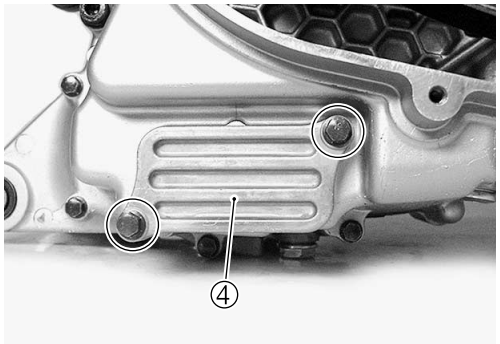

IDLE SHAFT

- Fit the washer ①.

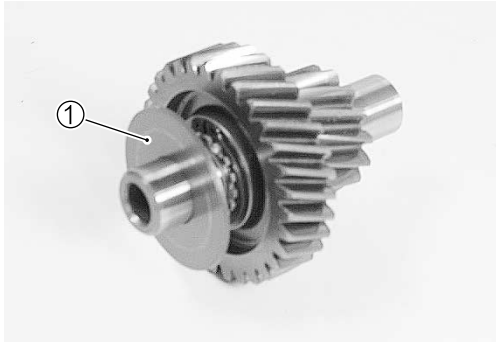

- Install the idle shaft ②.

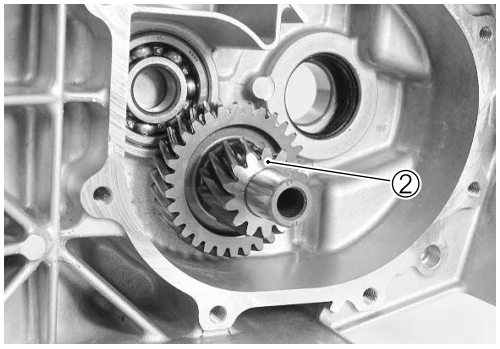

REAR AXLE SHAFT

- Install the rear axle shaft ①.

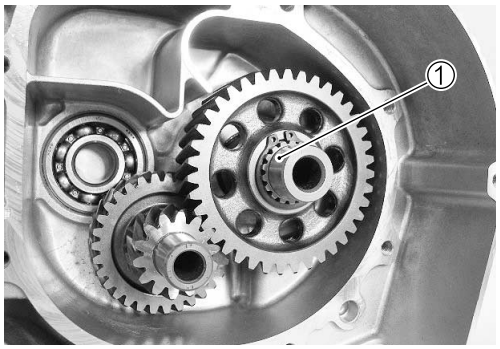

- Install the washers ②, ③.

CAUTION

Apply engine oil to each gear and shaft.

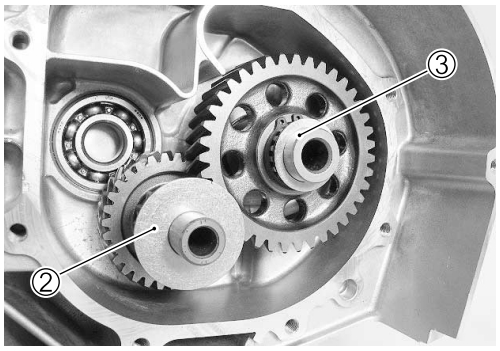

TRANSMISSION/TRANSMISSION COVER

- Install the O-ring ①.
- Apply a small amount of engine oil to the O-ring ①.

CAUTION

Replace the O-ring with a new one.

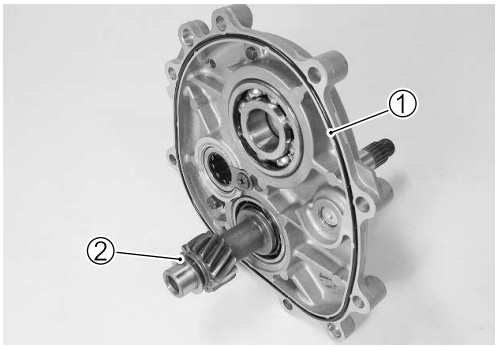

- Install the washer ②.

- Install the dowel pins ③.

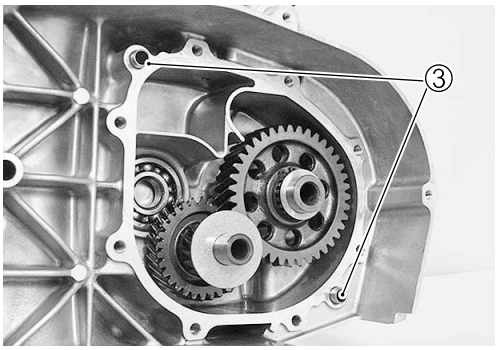

- Install the transmission cover ④.

CAUTION

*** Be careful not to drop the driveshaft washer inside during assembly.**
*** Also take care not to allow the O-ring to be pinched.**

Transmission cover bolt: 22 N·m (2.2 kgf-m, 16 lb-ft)

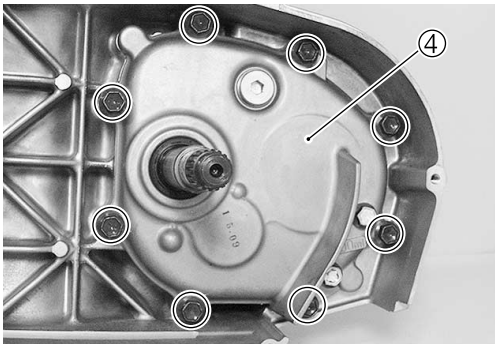

CLUTCH SHOE/MOVABLE DRIVEN FACE ASSEMBLY

- With the clutch shoe spring compressed by pulling the movable driven face toward the clutch, install the drive V-belt ① to the movable driven face ②.

CAUTION

*** Position the drive belt so that the arrow Ⓐ points the engine rotating direction.**
*** Degrease the drive belt contact surface (pulley face).**

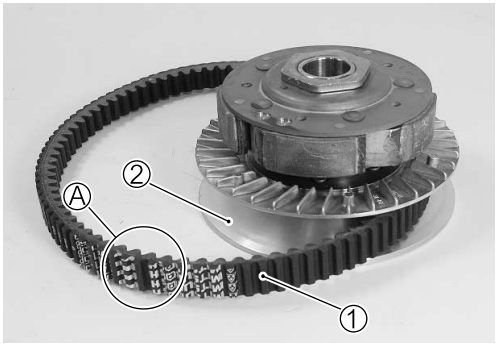

- Install the clutch shoe/movable driven face assembly ③.

CAUTION

Pull the center area Ⓑ of upper and lower belt lines to be close to each other to prevent the belt from expanding.

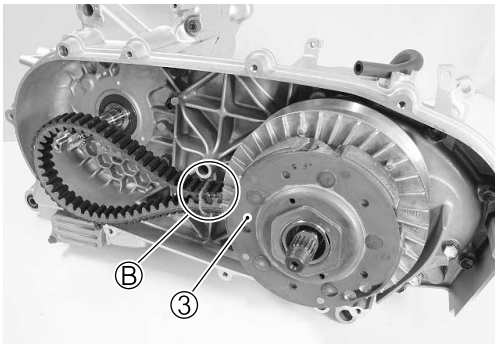

- Install the clutch housing ④, spring washer ⑤ and clutch housing nut ⑥.

CAUTION

*** Degrease the inner surface of the clutch housing.**
*** Pay attention to the direction of the spring washer.**

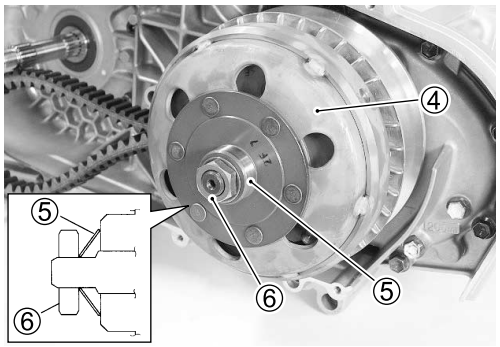

- Lock the clutch housing using the special tool and tighten the clutch housing nut to the specified torque.

TOOL 09930-40113: Rotor holder

Clutch housing nut: 85 N·m (8.5 kgf-m, 61.5 lb-ft)

MOVABLE DRIVE FACE ASSEMBLY

- Check that no roller inside the movable drive face is out of position from the slot.
- Install the movable drive face assembly ①.

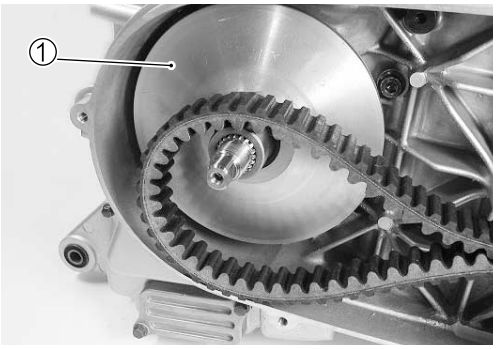

CAUTION

*** The assembly work should be carefully performed so as not to allow the roller to dislocate.**
*** Degrease the drive belt contact surface (pulley face).**

- Install the fixed drive face ②.
- Install the washer ③ and fixed drive face nut ④.

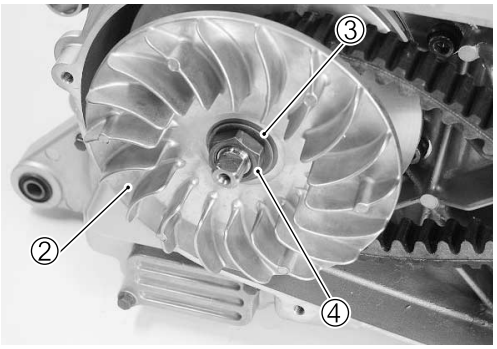

CAUTION

Check that the fixed drive face is not fouled with grease or other substance and if found, clean and degrease completely.
Check that the parts are properly engaged with the spline.

- With the crankshaft locked, tighten the fixed drive face nut ④ to the specified torque.

Fixed drive face nut: 105 N·m (10.5 kgf-m, 76.0 lb-ft)

- To obtain proper contact of the drive V-belt ⑤, turn the fixed drive face ⑥ until the fixed drive face and the movable driven face ⑦ can rotate synchronously.

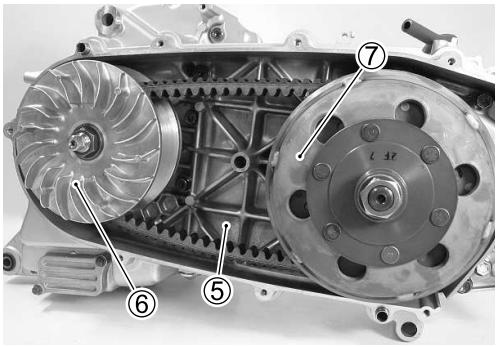

CLUTCH INNER COVER

- Install the dowel pins ①, ②.

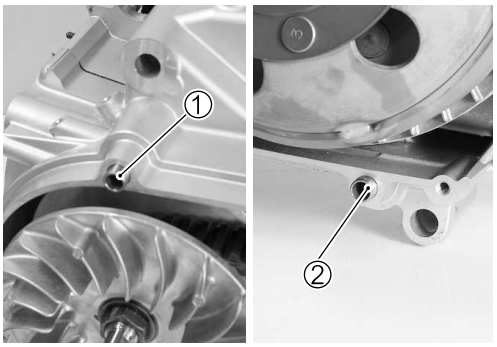

- Install the clutch inner cover ③.
- Tighten the clutch inner cover bolts to the specified torque.

Clutch inner cover bolt: 11 N·m (1.1 kgf-m, 8.0 lb-ft)

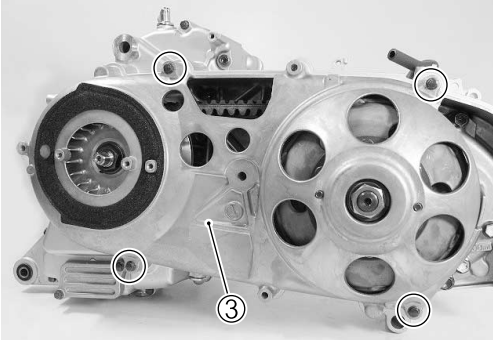

GENERATOR COVER

- Install the dowel pins ① and gasket ②.

CAUTION

Replace the gasket with a new one.

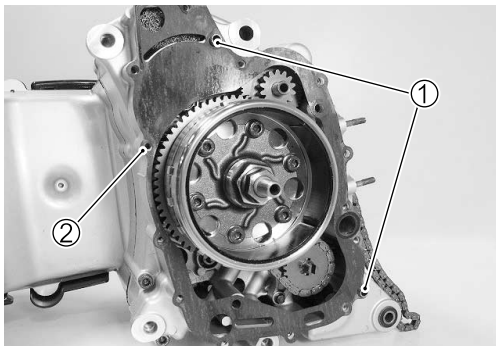

- Install the generator cover ③.
- Tighten the generator cover bolts to the specified torque.

CAUTION

*** Fit the gasket washer to the bolts Ⓐ.**
*** Replace the gaskets with new ones.**

Generator cover bolt: 11 N·m (1.1 kgf-m, 8.0 lb-ft)

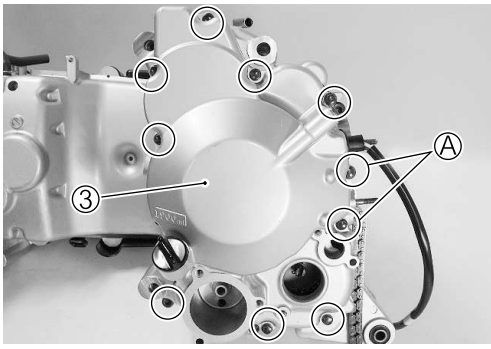

WATER PUMP

- Install the O-rings ①, ② to the water pump.

CAUTION

Replace the O-rings with new ones.

- Apply a small amount of engine oil to the O-rings.

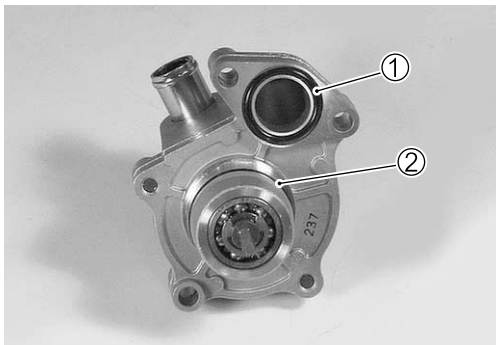

- Install the water pump ③.

CAUTION

Align the flats Ⓐ of the water pump shaft end with the slot Ⓑ of the oil pump shaft.

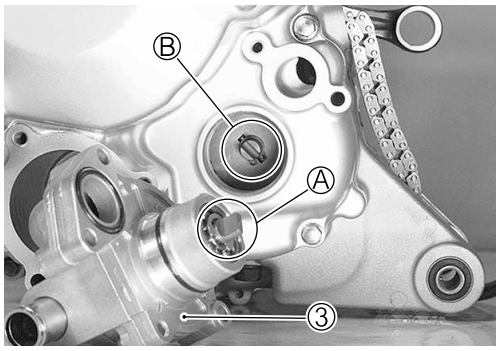

- Tighten the water pump bolts to the specified torque.

Water pump bolt: 10 N·m (1.0 kgf-m, 7.0 lb-ft)

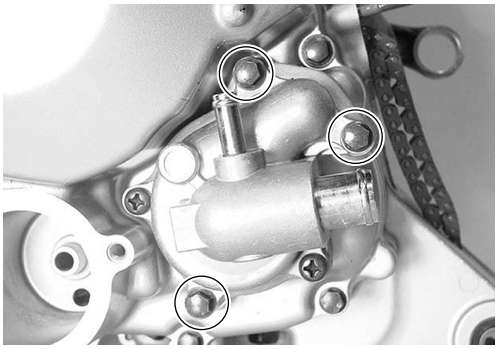

OIL FILTER

- Install the O-ring ①.

CAUTION

Replace the O-ring with a new one.

- Install the oil filter ②.

CAUTION

Position the oil filter so that the valve Ⓐ comes outside.

- Install the O-ring ③.

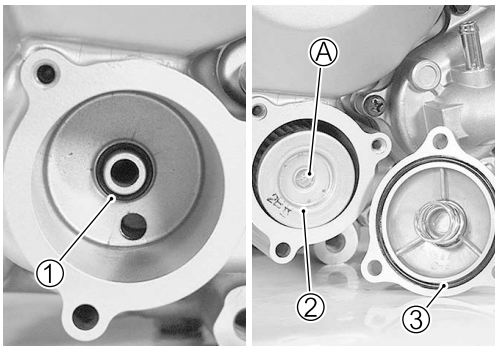

- Install the oil filter cap ④.
- Tighten the oil filter cap bolts to the specified torque.

CAUTION

Position the triangle mark Ⓑ of oil filter cap comes up side.

Oil filter cap bolt: 10 N·m (1.0 kgf-m, 7.0 lb-ft)

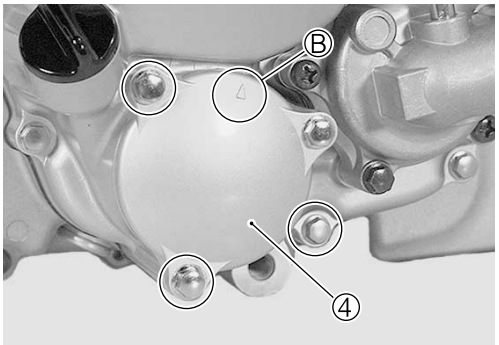

PISTON RING

- Install the piston rings in the order of oil ring, 2nd ring and top ring.
- To install the oil ring, fit the spacer ① first and then the side rails ②.

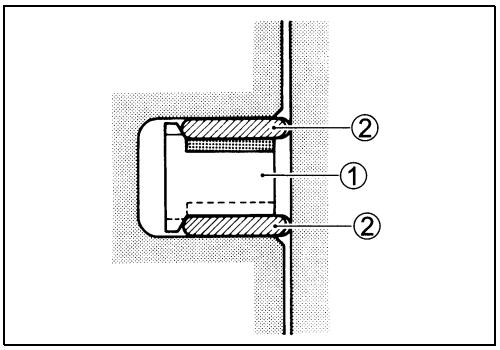

CAUTION

- **When installing the spacer, be careful so that the both edges are not overlapped.**
- **When installing the piston ring, be careful not to damage the piston.**
- **Do not expand the piston ring excessively since it is apt to be broken down.**

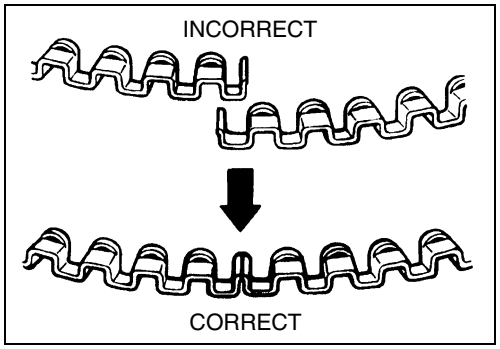

- Be careful not to mistake the top ring ③ and the second ring ④, the sectional form is different.

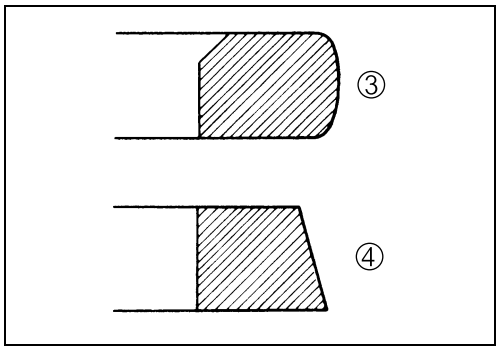

- Face the side with the stamped mark Ⓐ upward when assembling.

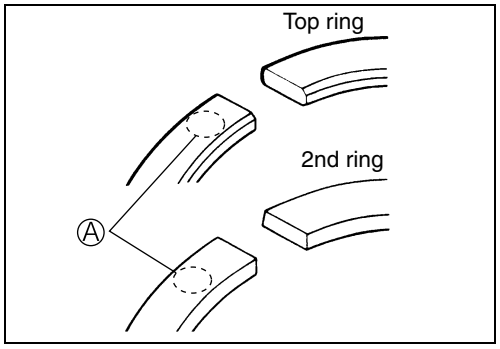

- After installing all the piston rings, check that each ring rotates smoothly.
- To prevent poor compression or oil leaking up to the cylinder inside, position each ring end gap as shown in the right figure.
  Ⓐ Second ring/side rail (lower side)
  Ⓑ Side rail (upper side)
  Ⓒ Top ring/spacer

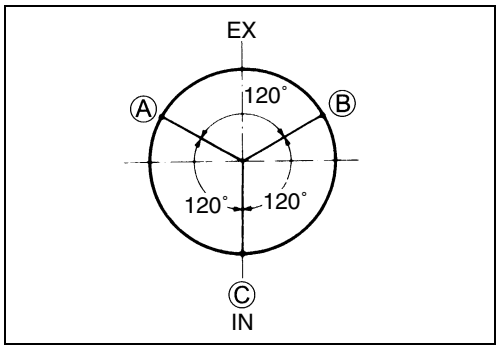

PISTON

- Lightly coat the piston pin with SUZUKI MOLY PASTE when inserting.

99000-25140: SUZUKI MOLY PASTE

- When installing the piston, turn the concaved part Ⓐ on the piston head to exhaust side.

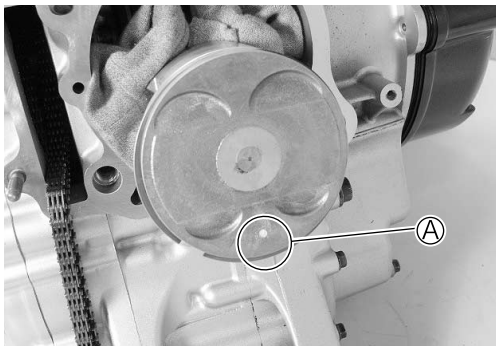

- Install the circlip ①.

CAUTION

*** Replace the circlip with a new one.**
*** Place a piece of rag under the piston when installing the circlip to prevent it from falling into the crankcase.**
*** The circlip end gap must be positioned so as not to coincide with the piston pin bore cutaway.**

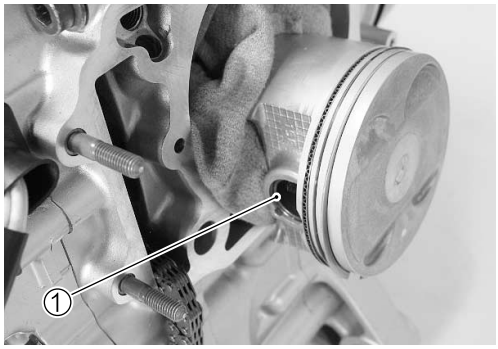

CYLINDER

- Install the dowel pins ① and a new gasket ② to the crankcase.

CAUTION

Replace the gasket with a new one.

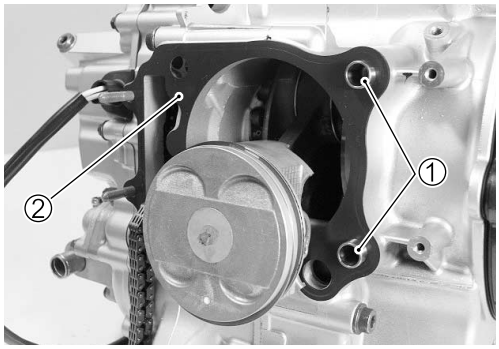

- Coat the cylinder wall and piston surface with oil.
- Install the cylinder ③.

CAUTION

When inserting the piston into the cylinder, use care not to break the piston ring.

- Temporary tighten the cylinder nuts ④.

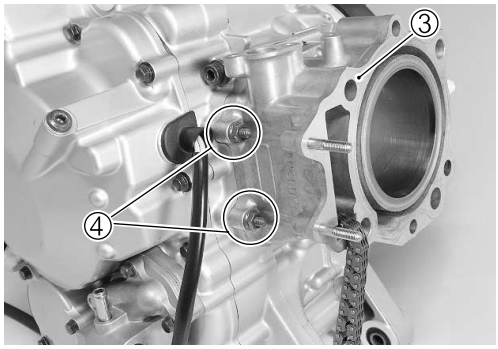

CAM CHAIN GUIDE

- Install the cam chain guide ①.

CAUTION

When installing the cam chain guide, check that the chain is properly engaged with the crankshaft sprocket.

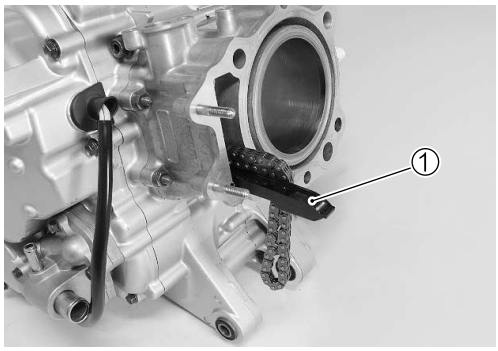

CYLINDER HEAD

- Place the dowel pins ① and cylinder gasket ② on the crankcase.

CAUTION

Replace the gasket with a new one.

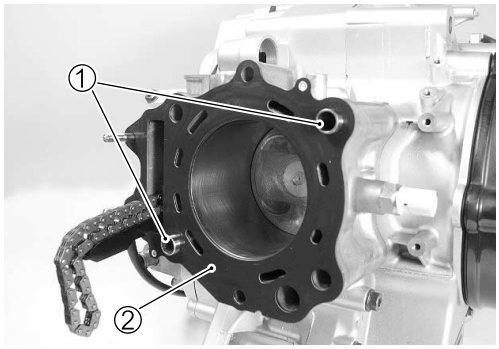

- Install the cylinder head ③.
- Install the copper washers ④ and bolts ⑤.

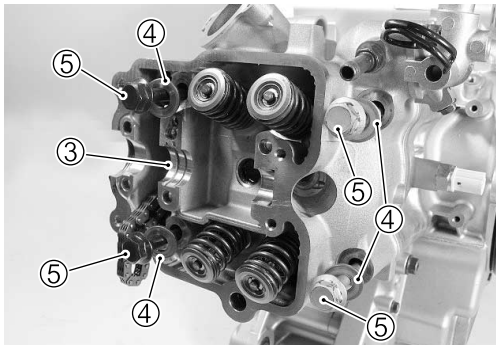

- Tighten the cylinder head bolts and nuts diagonally and evenly.
- The head bolt tightening must be performed in two stages, initial and final tightening.

Cylinder head bolt
Initial tightening: 25 N·m (2.5 kgf-m, 18.0 lb-ft)
Final tightening: 41 N·m (4.1 kgf-m, 29.5 lb-ft)

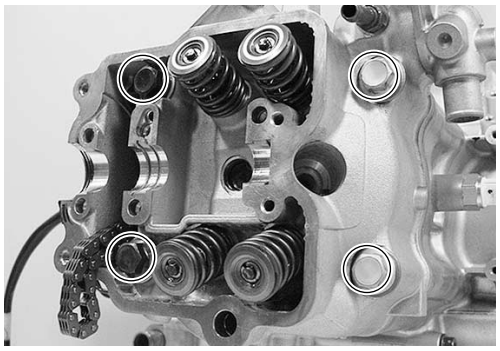

Cylinder head nut (M8): 25 N·m (2.5 kgf-m, 18.0 lb-ft)
Cylinder head nut (M6): 10 N·m (1.0 kgf-m, 7.0 lb-ft)
Cylinder nut : 10 N·m (1.0 kgf-m, 7.0 lb-ft)

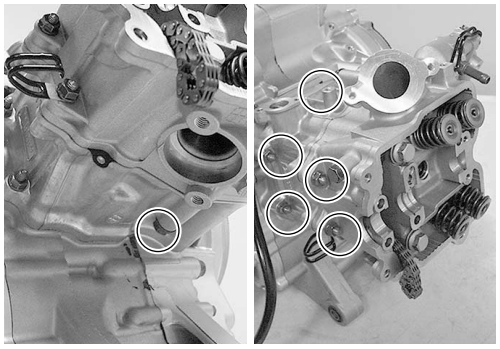

CAMSHAFT

- With the cam chain held by hand, turn the crankshaft in normal direction and align "T" mark on the generator rotor with the triangle mark Ⓐ on the generator cover.

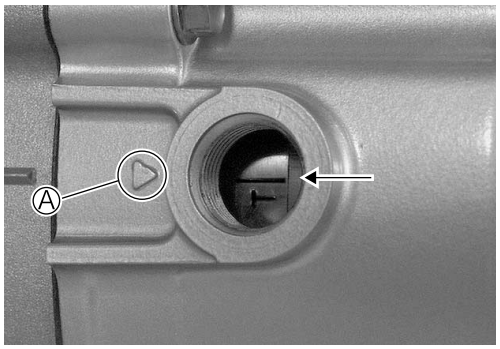

- Install the C-ring.
- Position the camshaft ①, cam chain ② and cam sprocket ③.

CAUTION

Position the cam sprocket so that the stamped mark side faces outside.

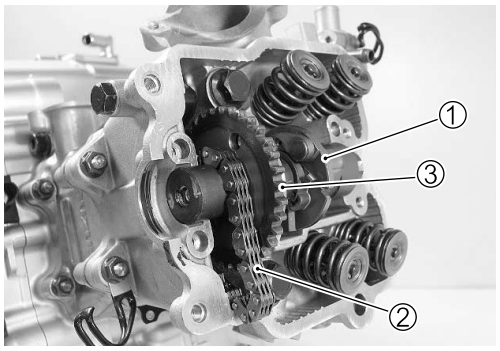

- Align the engraved line Ⓐ with the cylinder head top surface.
- Engage the cam chain with the cam sprocket.
- Align the locating pin hole Ⓑ with the locating pin on the camshaft.

NOTE:
Turn the sprocket little by little moving the cam chain by one link at a time.

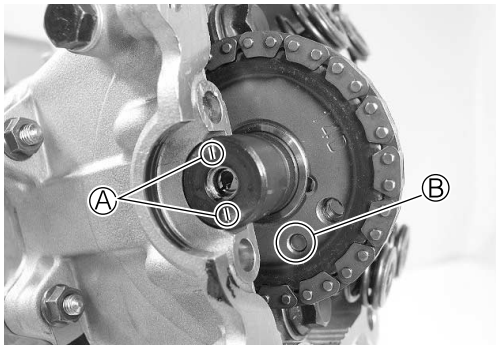

- Apply THREAD LOCK to the cam sprocket bolts.

1303 99000-32030: THREAD LOCK "1303"

- Position the lock washer ④ so that the locating pin on the camshaft is covered and tighten the cam sprocket bolts to the specified torque.

Cam sprocket bolt: 15 N·m (1.5 kgf-m, 11.0 lb-ft)

- Bend up the lock washer to lock the bolts.

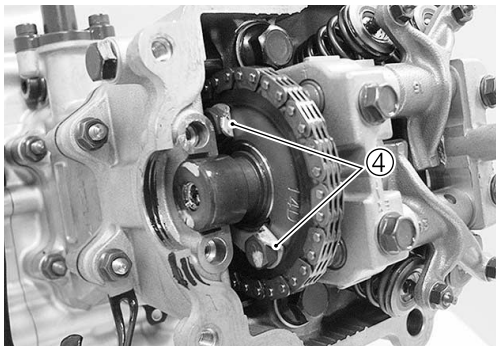

- Install the dowel pins ⑤.
- Apply MOLYBDENUM OIL SOLUTION on the cam faces.

M/O MOLYBDENUM OIL SOLUTION

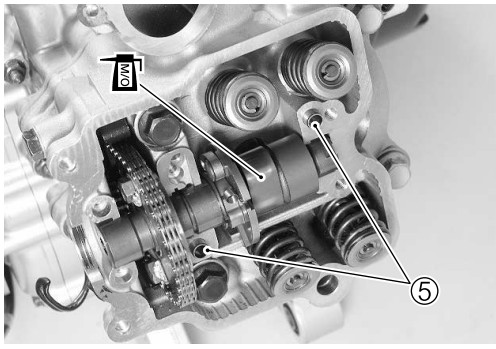

- Install the camshaft holder ⑥, then tighten the camshaft holder bolts to the specified torque.

Camshaft holder bolt: 10 N·m (1.0 kgf-m, 7.0 lb-ft)

- Install the dowel pins ⑦.

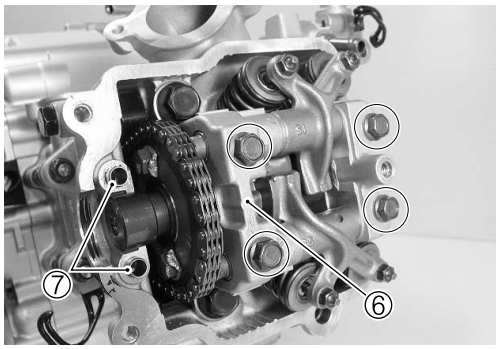

- Install the camshaft journal holder ⑧, then tighten the camshaft journal holder bolts to the specified torque.

Camshaft journal holder bolt: 10 N·m (1.0 kgf-m, 7.0 lb-ft)

CAUTION

To install the camshaft journal holder ⑧, the protruded side Ⓓ must be positioned outside.

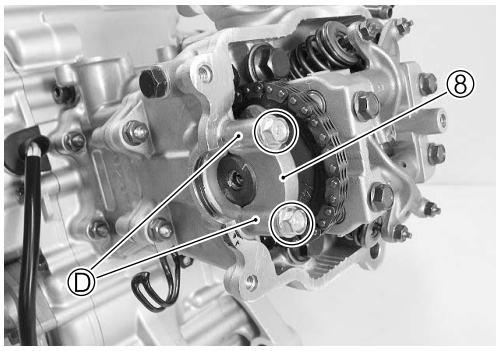

CAM CHAIN TENSION ADJUSTER

- With the spring holder bolt and spring removed from the cam chain tension adjuster, release locking of the ratchet mechanism ① and push the push rod ② all the way in.

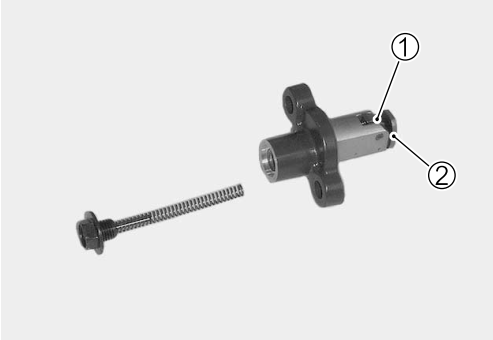

- Position the cam chain tension adjuster ③ on the cylinder.
- Tighten the cam chain tension adjuster bolts to the specified torque.

CAUTION

Replace the gasket with a new one.

Cam chain tension adjuster bolt: 10 N·m (1.0 kgf-m, 7.0 lb-ft)

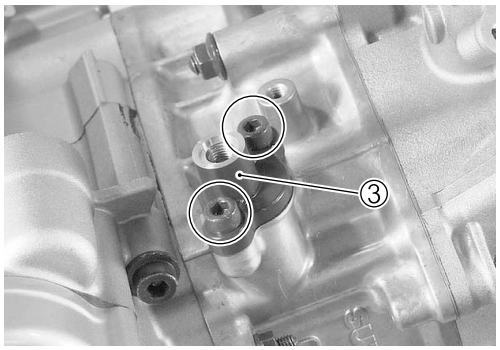

- Install the O-ring ④, spring ⑤ and spring holder bolt ⑥.

CAUTION

Replace the O-ring with a new one.

- Tighten the spring holder bolts to the specified torque.

Spring holder bolt: 8 N·m (0.8 kgf-m, 5.7 lb-ft)

CAUTION

*** When the cam chain tension adjuster has been installed, check for cam chain tension to determine if the tension adjuster is functioning properly.**
*** Turn the crankshaft and check that all the moving parts(e.g., camshaft and the rocker arm)work properly.**

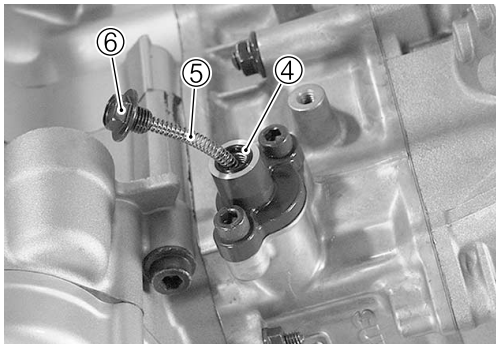

- Inspect the valve clearance. (☞2-5)

CYLINDER HEAD COVER

- Install the gasket to the cylinder head cover ①.

CAUTION

Replace the gasket with a new one.

- Apply SUZUKI BOND to the cam end cap.

1216 99000-31160: SUZUKI BOND "1216"

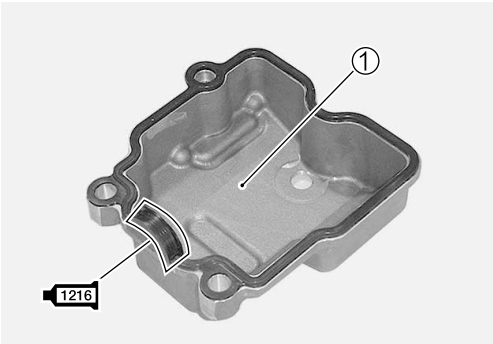

- Install the cylinder head cover.
- Install the seal gasket to the cylinder head cover bolt ①.
- Tighten the cylinder head cover bolts to the specified torque.

Cylinder head cover bolt: 14 N·m (1.4 kgf-m, 10 lb-ft)

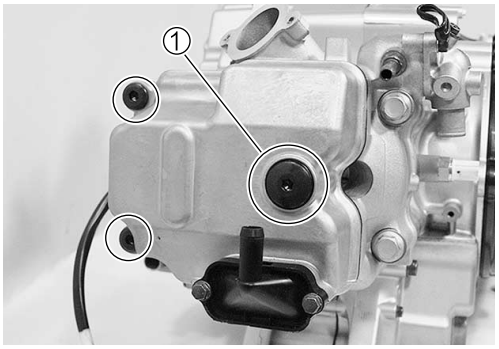

CAUTION

Replace the gasket with a new one.

- Install the spark plug. (☞2-7)

STARTER MOTOR

- Install the O-ring ① to the starter motor.

CAUTION

Replace the O-ring with a new one.

- Apply SUZUKI SUPER GREASE to the O-ring ①.

99000-25010: SUZUKI SUPER GREASE "A" (Others)
99000-25030: SUZUKI SUPER GREASE "A" (USA)

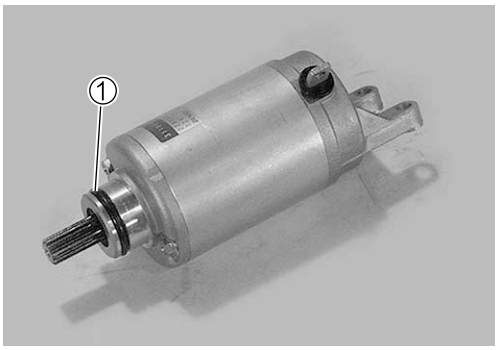

FI SYSTEM

CONTENTS

PRECAUTIONS IN SERVICING

When handling the component parts or servicing the FI system, observe the following points for the safety of the system.

ELETRICAL PARTS

CONNECTOR/COUPLER

- When connecting a connector, be sure to push it in until a click is felt.
- With a lock type coupler, be sure to release the lock when disconnecting, and push it in fully till the works when connecting it.
- When disconnecting the coupler, be sure to hold the coupler body and do not pull the lead wires.
- Inspect each terminal on the connector/coupler for looseness or bending.

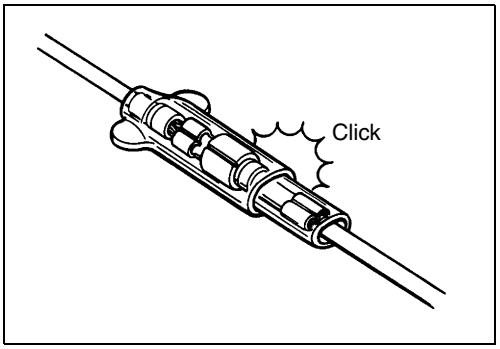

- Inspect each terminal for corrosion and contamination.
  The terminals must be clean and free of any foreign material which could impede proper terminal contact.

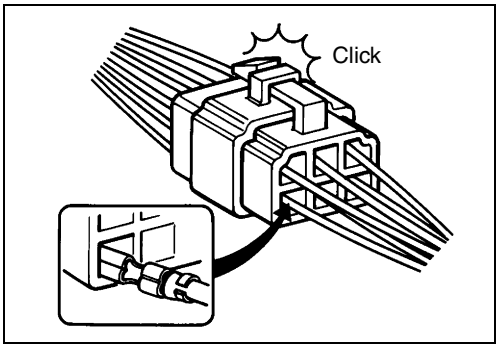

- Inspect each lead wire circuit for poor connection by shaking it by hand lightly. If any abnormal condition is found, repair or replace.

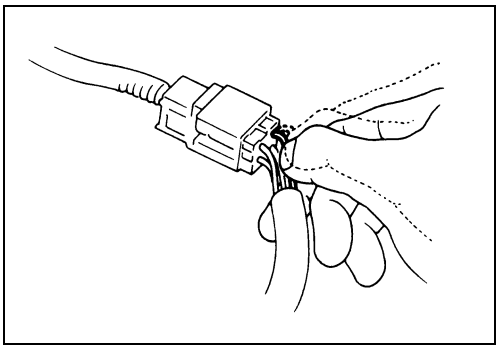

- When taking measurements at electrical connectors using a tester probe, be sure to insert the probe from the wire harness side (backside) of the connector/coupler.

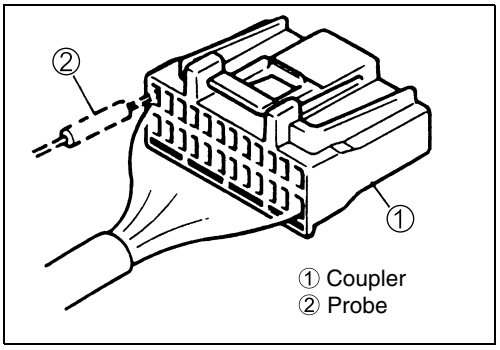

- When connecting meter probe from the terminal side of the coupler (connection from harness side not being possible), use extra care not to force and cause the male terminal to bend or the female terminal to open.
  Connect the probe as shown to avoid opening of female terminal.
  Never push in the probe where male terminal is supposed to fit.
- Check the male connector for bend and female connector for excessive opening. Also check the coupler for locking (looseness), corrosion, dust, etc.

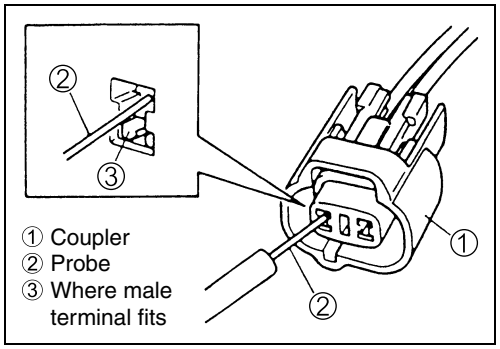

FUSE

- When a fuse blows, always investigate the cause correct it and then replace the fuse.
- Do not use a fuse of a different capacity.
- Do not use wire or any other substitute for the fuse.

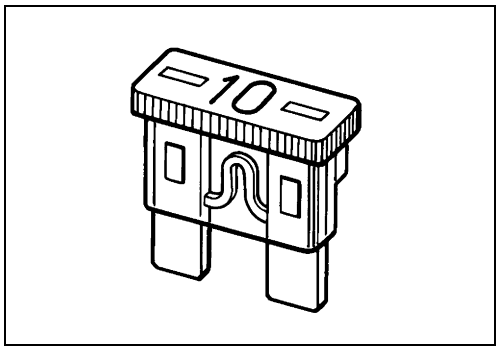

ECM/VARIOUS SENSORS

- Since each component is a high-precision part, great care should be taken not to apply any sharp impacts during removal and installation.

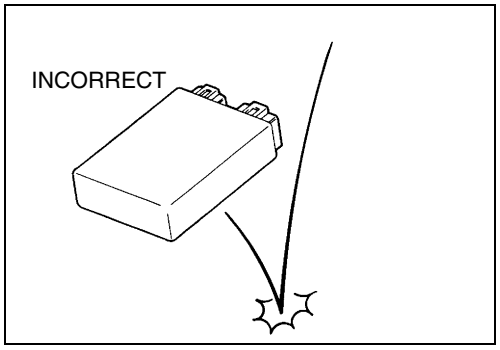

- Be careful not to touch the electrical terminals of the ECM. The static electricity from your body may damage this part.

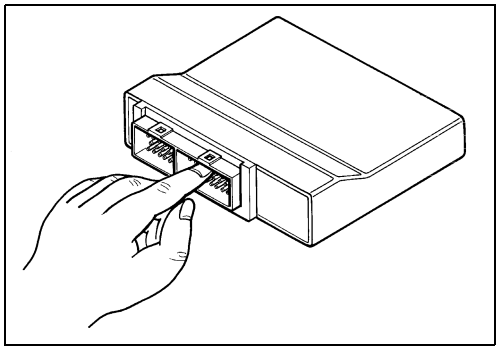

- When disconnecting and connecting the ECM, make sure to turn OFF the ignition switch, or electronic parts may get damaged.

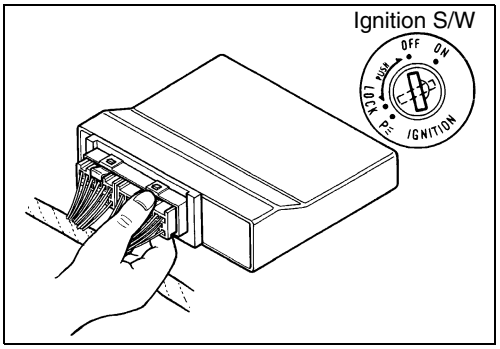

- Battery connection in reverse polarity is strictly prohibited. Such a wrong connection will damage the components of the FI system instantly when reverse power is applied.

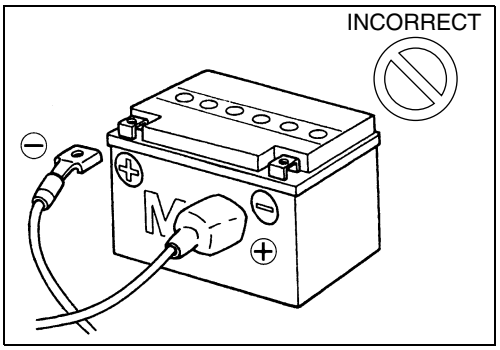

- Removing any battery terminal of a running engine is strictly prohibited.
  The moment such removal is made, damaging counter electromotive force will be applied to the ECM which may result in serious damage.

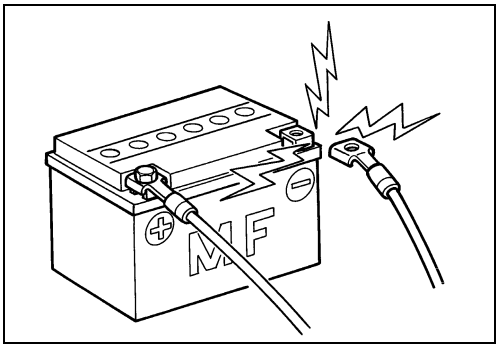

- Before measuring voltage at each terminal, check to make sure that battery voltage is 11 V or higher. Terminal voltage check at low battery voltage will lead to erroneous diagnosis.

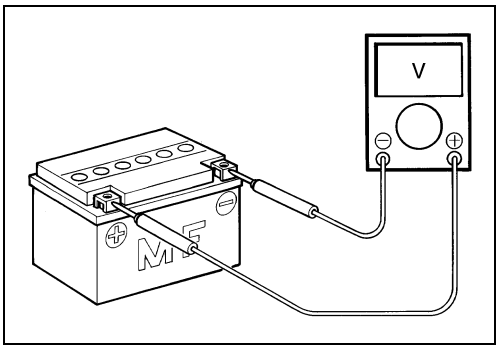

- Never connect any tester (voltmeter, ohmmeter, or whatever) to the ECM when its coupler is disconnected.
  Otherwise, damage to ECM may result.
- Never connect an ohmmeter to the ECM with its coupler connected. If attempted, damage to ECM or sensors may result.
- Be sure to use a specified voltmeter/ohmmeter. Otherwise, accurate measurements may not be obtained and personal injury may result.

ELECTRICAL CIRCUIT INSPECTION PROCEDURE

While there are various methods for electrical circuit inspection, described here is a general method to check for open and short circuit using an ohmmeter and a voltmeter.

OPEN CIRCUIT CHECK

Possible causes for the open circuits are as follows. As the cause can exist in the connector/coupler or terminal, they need to be checked carefully.

- Loose connection of connector/coupler.
- Poor contact of terminal (due to dirt, corrosion or rust, poor contact tension, entry of foreign object etc.)
- Wire harness being open.
- Poor terminal-to-wire connection

- Disconnect the negative cable from the battery.
- Check each connector/coupler at both ends of the circuit being checked for loose connection. Also check for condition of the coupler lock if equipped.

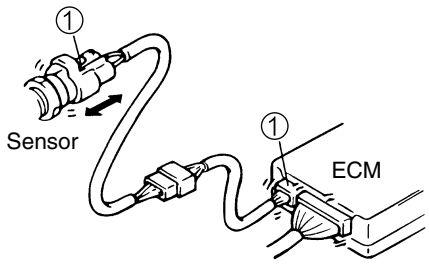

① Check for loose connection

- Using a test male terminal, check the female terminals of the circuit being checked for contact tension.
  Check each terminal visually for poor contact (possibly caused by dirt, corrosion, rust, entry of foreign object, etc.). At the same time, check to make sure that each terminal is fully inserted in the coupler and locked.
  If contact tension is not enough, rectify the contact to increase tension or replace.
  The teminals must be clean and free of any foreign material which could impede proper teminal contact.

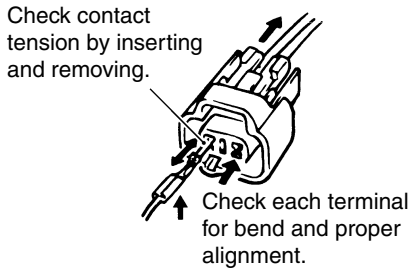

- Using continuity inspect or voltage check procedure as described below, inspect the wire harness terminals for open circuit and poor connection. Locate abnormality, if any.

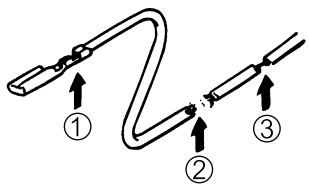

① Looseness of crimping
② Open
③ Thinwire (a few strands left)

Continuity check

- Measure resistance across coupler Ⓑ (between Ⓐ and Ⓒ in the figure).
  If no continuity is indicated (infinity or over limit), the circuit is open between terminals Ⓐ and Ⓒ.

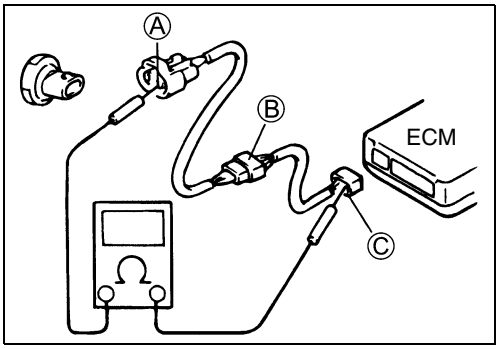

- Disconnect the coupler Ⓑ and measure resistance between couplers Ⓐ and Ⓑ.
  If no continuity is indicated, the circuit is open between couplers Ⓐ and Ⓑ. If continuity is indicated, there is an open circuit between couplers Ⓑ' and Ⓒ or an abnormality in coupler Ⓑ' or coupler Ⓒ.

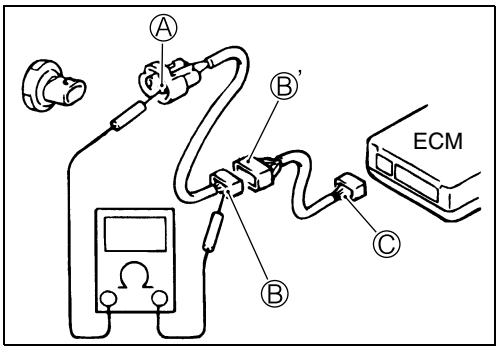

VOLTAGE CHECK

If voltage is supplied to the circuit being checked, voltage check can be used as circuit check.

- With all connectors/couplers connected and voltage applied to the circuit being checked, measure voltage between each terminal and body ground.

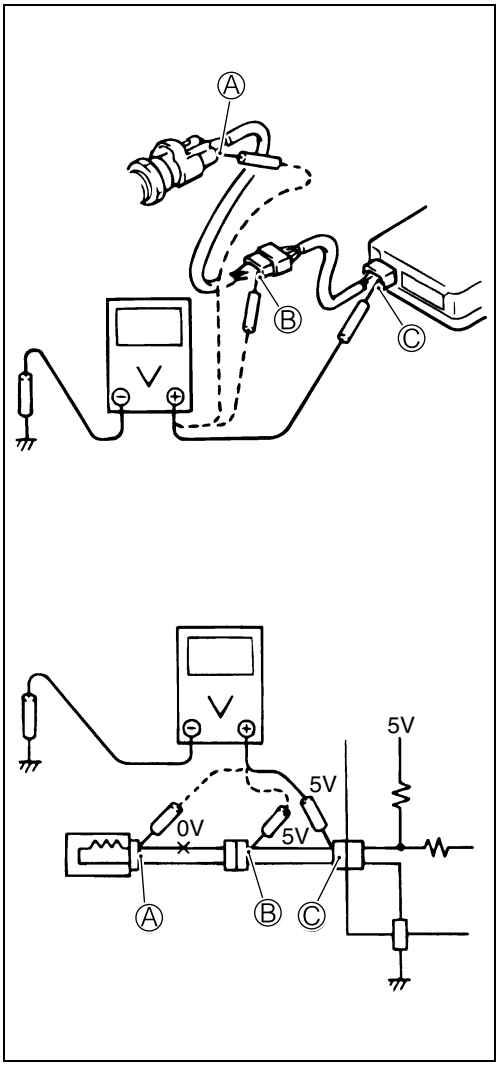

If measurements were taken as shown in the figure at the right and results are as listed below, it means that the circuit is open between terminals Ⓐ and Ⓑ.

Voltage Between:

Ⓒ and body ground: Approx. 5V
Ⓑ and body ground: Approx. 5V
Ⓐ and body ground: 0V

Also, if measured values are as listed below, a resistance (abnormality) exists which causes the voltage drop in the circuit between terminals Ⓐ and Ⓑ.

Voltage Between:

Ⓒ and body ground: Approx. 5V
Ⓑ and body ground: Approx. 5V
Ⓐ and body ground: 3V
2V voltage drop

SHORT CIRCUIT CHECK (WIRE HERNESS TO GROUND)

- Disconnect the negative cable from the battery.
- Disconnect the connectors/couplers at both ends of the circuit to be checked.

NOTE:
If the circuit to be checked branches to other parts as shown, disconnect all connectors/couplers of those parts. Otherwise, diagnosis will be misled.

- Measure resistance between terminal at one end of circuit (Ⓐ terminal in figure) and body ground. If continuity is indicated, there is a short circuit to ground between terminals Ⓐ and Ⓒ.

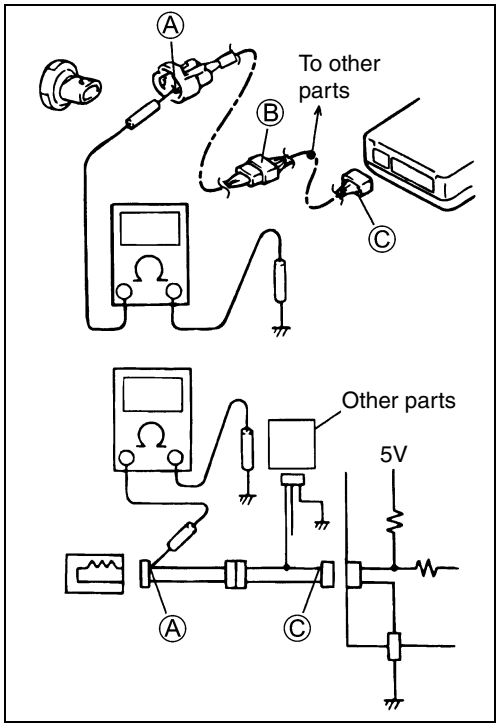

- Disconnect the connector/coupler included in circuit (coupler Ⓑ) and measure resistance between terminal Ⓐ and body ground.
  If continuity is indicated, the circuit is shorted to the ground between terminals Ⓐ and Ⓑ.

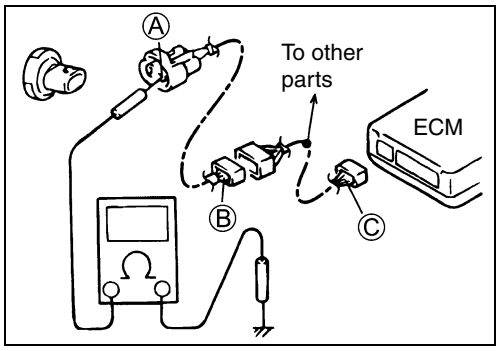

USING TESTERS

- Use the Suzuki multi-circuit tester set (09990-25008).
- Use well-charged batteries in the tester.
- Be sure to set the tester to the correct testing range.

USING THE TESTER

- Incorrectly connecting the ⊕ and ⊖ probes may cause the inside of the tester to burnout.
- If the voltage and current are not known, make measurements using the highest range.
- When measuring the resistance with the multi-circuit tester, ∞ will be shown as 10.00 MΩ and “1” flashes in the display.
- Check that no voltage is applied before making the measurement. If voltage is applied the tester may be damaged.
- After using the tester, turn the power off.

TOOL 09900-25008: Multi-circuit tester set

NOTE:

** When connecting the multi-circuit tester, use a fine needle pointed probe or install fine copper wires (O.D is below 0.5mm) to the back side of the lead wire coupler and connect the probes of tester to them.*

** Use a fine copper wire, the outer diameter being below 0.5 mm, to prevent the rubber of the water proof coupler from damage.*

MULTI-CIRCUIT TESTER

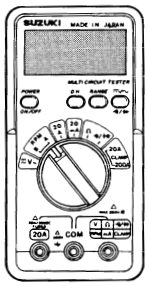

FI SYSTEM TECHNICAL FEATURES

INJECTION TIME (INJECTION VOLUME)

The factors to determine the injection time include the basic fuel injection time, which is calculated on the basis of intake air pressure, engine speed and throttle opening angle, and various compensations.

These compensations are determined according to the signals from various sensors that detect the engine and driving conditions.

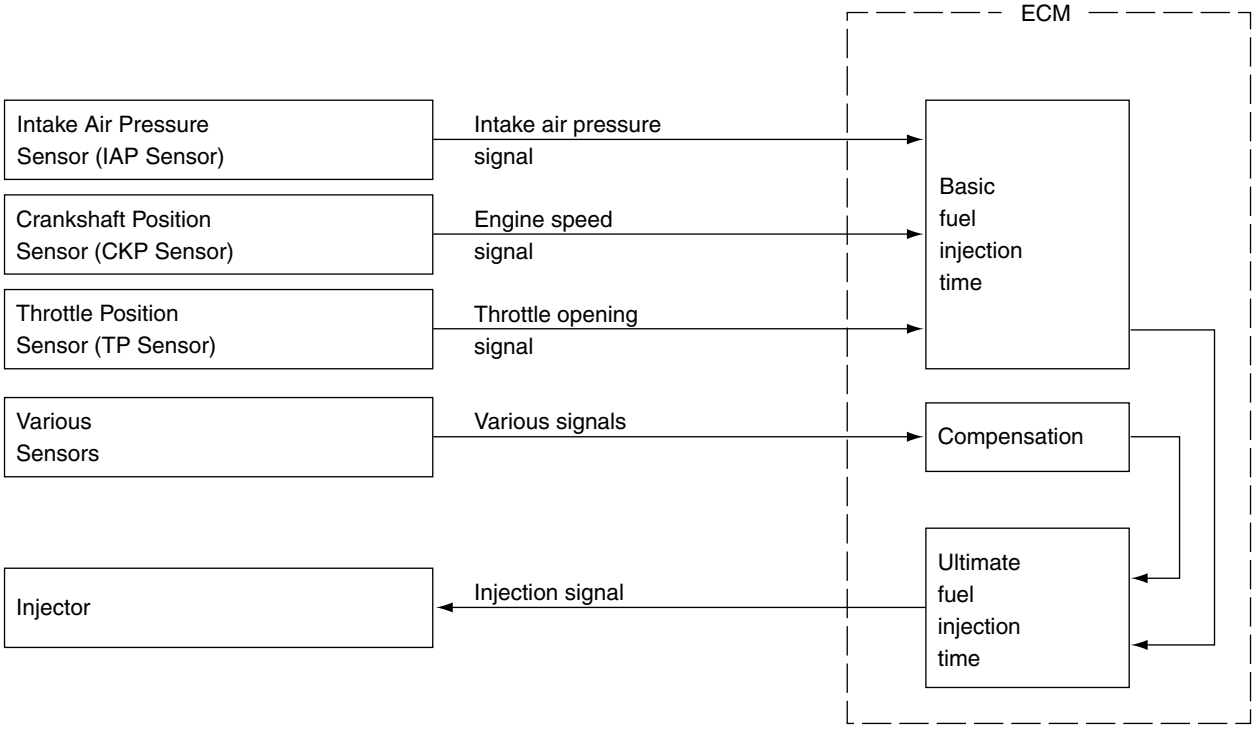

COMPENSATION OF INJECTION TIME (VOLUME)

The following different signals are output from the respective sensors for compensation of the fuel injection time (volume).

SIGNAL	DESCRIPTION
ENGINE COOLANT TEMPERATURE SENSOR SIGNAL	When engine coolant temperature is low, injection time (volume) is increased.
INTAKE AIR TEMPERATURE SENSOR SIGNAL	When intake air temperature is low, injection time (volume) is increased.
HEATED OXYGEN SENSOR SIGNAL (E-02, 19, 54)	Air/fuel ratio is compensated to the theoretical ratio from density of oxygen in exhaust gasses.The compensation occurs in such way more fuel is supplied if detected air/fuel ratio is lean and less fuel is supplied if it is rich.
BATTERY VOLTAGE SIGNAL	ECM operates on the battery voltage and at the same time, it monitors the voltage signal for compensation of the fuel injection time (volume). A longer injection time is needed to adjust injection volume in the case of low voltage.
STARTING SIGNAL	When starting engine, additional fuel is injected during cranking engine.
ACCELERATION SIGNAL/ DECELETATION SIGNAL	During acceleration, the fuel injection time (volume) is increased in accordance with the throttle opening speed and engine rpm. During deceleration, the fuel injection time (volume) is decreased.

INJECTION STOP CONTROL

SIGNAL	DESCRIPTION
TIP OVER SENSOR SIGNAL (FUEL SHUT-OFF)	When the motorcycle tips over, the tip over sensor sends a signal to the ECM. Then, this signal cuts OFF current supplied to the fuel pump, fuel injector and ignition coil.
OVER-REV. LIMITER SIGNAL	The fuel injectors stop operation when engine rpm reaches rev. limit rpm.

FI SYSTEM PARTS LOCATION

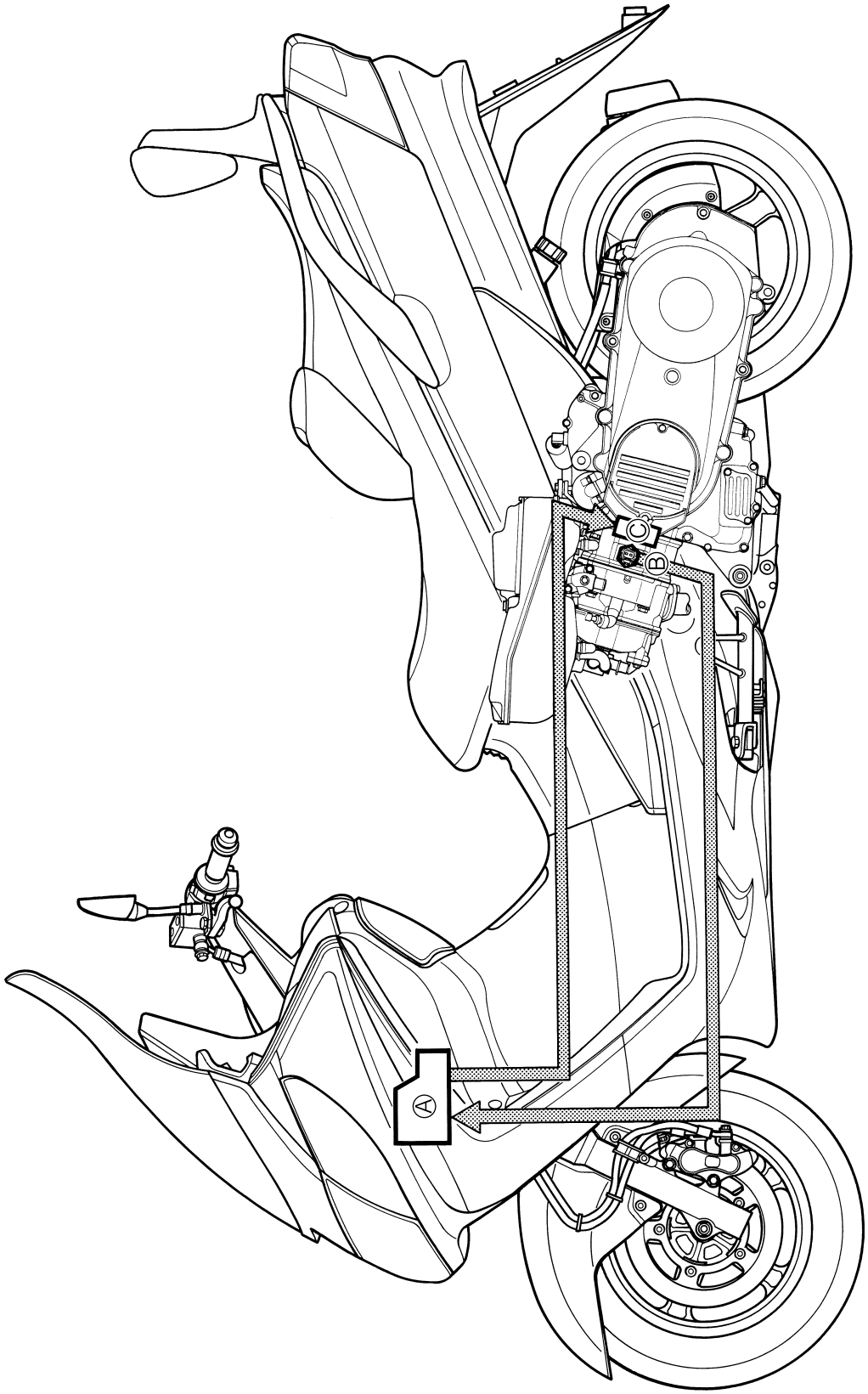

Ⓐ ECM
Ⓑ Engine coolant temperature sensor (ECTS)
Ⓒ Ignition coil (IG COIL)

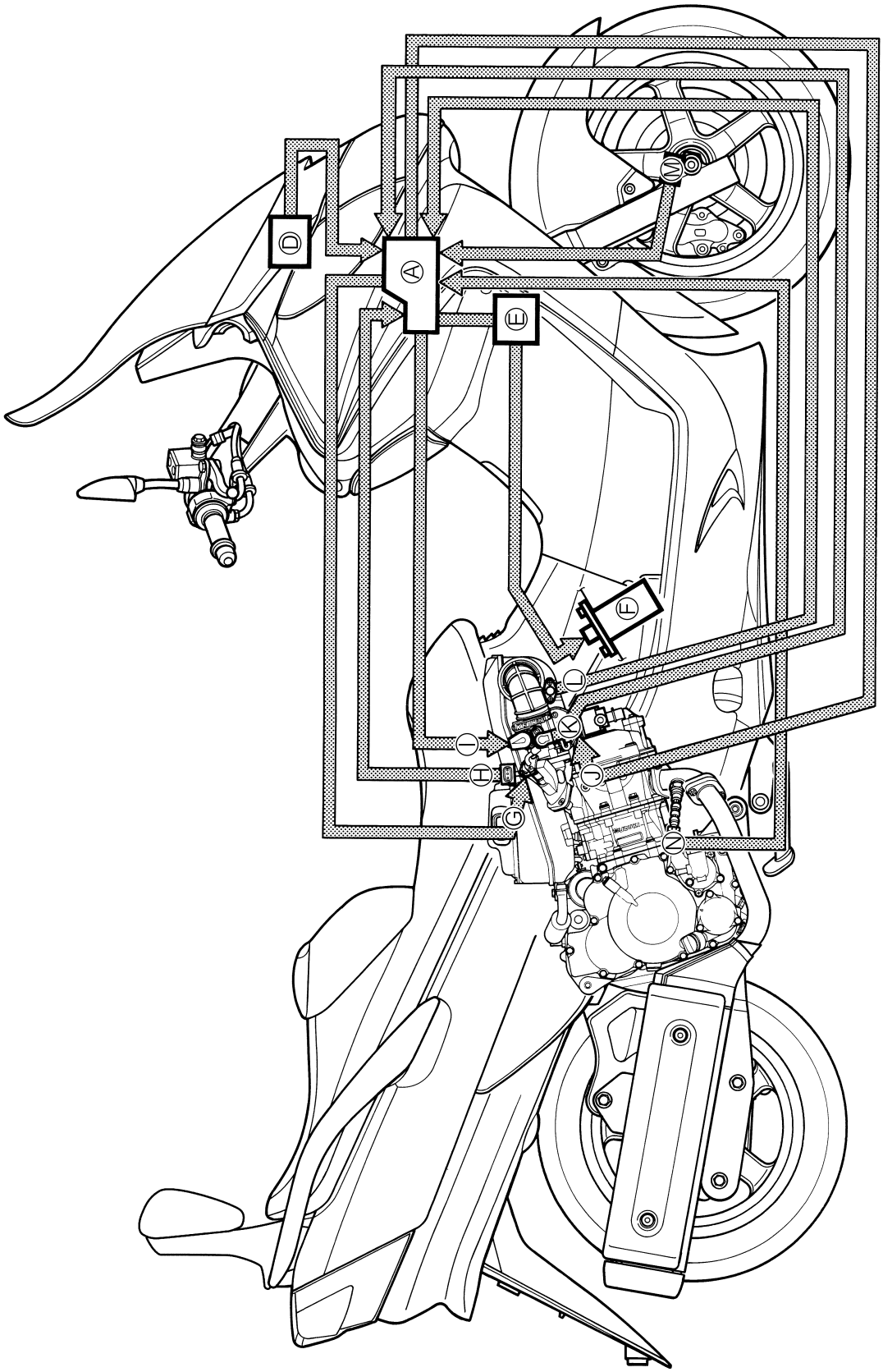
Ⓐ ECM
Ⓑ Tip over sensor (TOS)
Ⓔ Fuel pump relay (FP RELAY)
Ⓕ Fuel pump (FP)
Ⓖ Fuel injector (FI)
Ⓗ Intake air pressure sensor (IAPS)
Ⓘ Idle air control valve (IAC)
Ⓙ PAIR control solenoid
Ⓚ Throttle position sensor (TPS)
Ⓛ Intake air temperature sensor (IATS)
Ⓜ Speed sensor
Ⓝ HO2 sensor

FI SYSTEM WIRING DIAGRAM

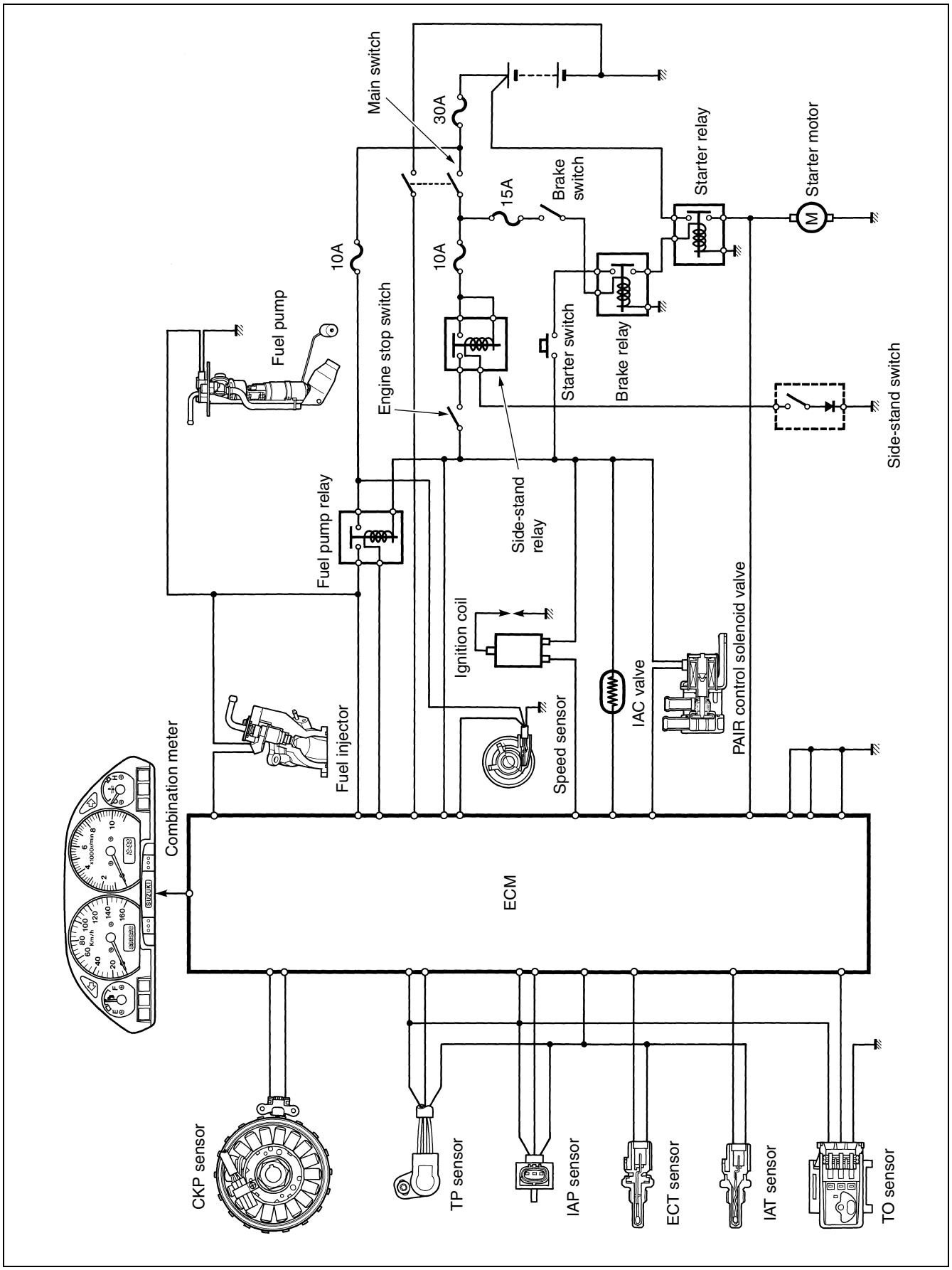

SELF-DIAGNOSIS FUNCTION

The self-diagnosis function is incorporated in the ECM. The function has two modes, “User mode” and “Dealer mode”. The user can only be notified by the LCD (DISPLAY) panel and FI light. To check the function of the individual FI system devices, the dealer mode is prepared. In this check, the special tool is necessary to read the code of the malfunction items.

USER MODE

MALFUNCTION		LCD (DISPLAY) INDICATION	FI LIGHT INDICATION	INDICATION MODE
“NO”		Odometer	—	—
“YES”	Engine can start	Odometer and “FI” letters *1	FI light turns ON.	Each 2 sec. Odometer or “FI” is indicated.
	Engine can not start	“FI” letters *2	FI light turns ON and blinks.	“FI” is indicated continuously.

*1
When one of the signals is not received by ECM, the fail-safe circuit works and injection is not stopped. In this case, “FI” and odometer are indicated in the LCD panel and motorcycle can run.
*2
The injection signal is stopped, when the crankshaft position sensor signal, tip over sensor signal, ignition signal, injector signal, fuel pump relay signal or ignition switch signal is not sent to ECM. In this case, “FI” is indicated in the LCD panel. Motorcycle does not run.

“CHEC”: The LCD panel indicates “CHEC” when no communication signal from the ECM is received for 5 seconds.
For Example
: The ignition switch is turned ON, and the engine stop switch is turned OFF. In this case, the speedometer does not receive any signal from ECM, and the panel indicates “CHEC”.
If CHEC is indicated, the LCD does not indicate the trouble code. It is necessary to check the wiring harness between ECM and speedometer couplers.
The possible cause of this indication is as follows;
Engine stop switch is in OFF position. Ignition fuse is burnt.

DEALER MODE

The defective function is memorized in the computer. Use the special tool's coupler to connect to the dealer mode coupler. The memorized malfunction code is displayed on LCD (DISPLAY) panel. Malfunction means that the ECM does not receive signal from the devices. These affected devices are indicated in the code form.

TOOL 09930-82720: Mode select switch

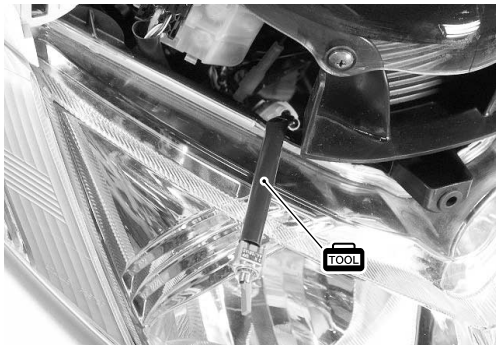

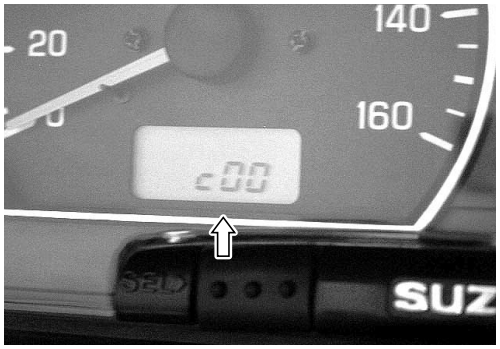

CAUTION

Before checking the malfunction code, do not disconnect the ECM lead wire couplers.
If the couplers from the ECM are disconnected, the malfunction code memory is erased and the malfunction code can not be checked.

MALFUNCTION	LCD (DISPLAY) INDICATION	FI LIGHT INDICATION	INDICATION MODE
"NO"	C00	FI light turns OFF.	—
"YES"	C**code is indicated from small numeral to large one.		For each 2 sec., code is indicated.

CODE	MALFUNCTION PART	REMARKS
C00	None	No defective part
C12	Crankshaft position sensor (CKPS)	Pick-up coil signal, signal generator
C13	Intake air position sensor (IAPS)	
C14	Throttle position sensor (TPS)	
C15	Engine coolant temperature sensor (ECTS)	
C21	Intake air temperature sensor (IATS)	
C23	Tip over sensor (TOS)	
C24	Ignition signal (IG coil)	
C32	Fuel injector signal	
C40	Idle air control valve (IAC valve)	
C41	Fuel pump control system (FP control system)	Fuel pump, Fuel pump relay
C42	Ignition switch signal (IG switch signal)	Anti-theft
C44	Heated oxygen sensor (HO2S)	E-02, 19, 54

In the LCD (DISPLAY) panel, the malfunction code is indicated from small code to large code.

TPS ADJUSTMENT

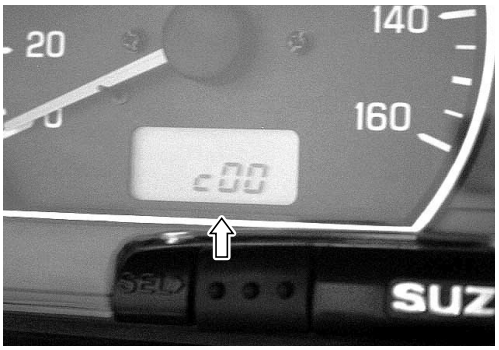

1. Warm up the engine and adjust the engine idle speed to 1 400 ± 100 rpm. (☞2-11)
2. Stop the engine.
3. Connect the special tool (Mode select switch) and select the dealer mode.
4. If the throttle position sensor adjustment is necessary, loosen the screw and turn the throttle position sensor and bring the line to middle.
5. Then, tighten the screw to fix the throttle position sensor.

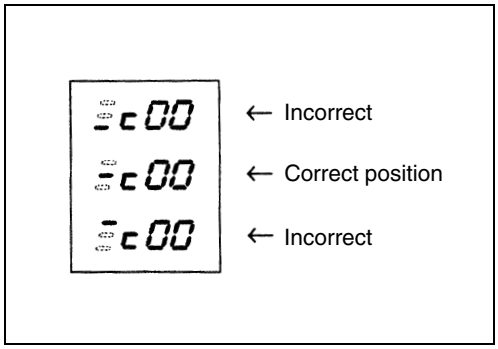

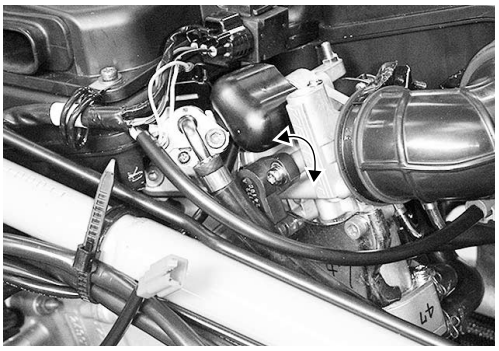

FAIL-SAFE FUNCTION

FI system is provided with fail-safe function to allow the engine to start and the motorcycle to run in a minimum performance necessary even under malfunction condition.

ITEM	FAIL-SAFE MODE	STARTING ABILTY	RUNNING ABILITY
Intake air pressure sensor	Intake air pressure is fixed to 760 mmHg.	“YES”	“YES”
Throttle position sensor	The throttle opening is fixed to full open position. Ignition timing is also fixed.	“YES”	“YES”
Engine coolant temperature sensor	Engine coolant temperature value is fixed to 80 °C (176 °F).	“YES”	“YES”
Intake air temperature sensor	Intake air temperature value is fixed to 40 °C (104 °F).	“YES”	“YES”
HO2 sensor (E-02, 19, 54)	Feedback compensation is inhibited. (Air/fuel ratio is fixed to normal.)	“YES”	“YES”

The engine can start and can run even if the above signal is not received from each sensor. But, the engine running condition is not complete, providing only emergency help (by fail-safe circuit). In this case, it is necessary to bring the motorcycle to the workshop for complete repair.

FI SYSTEM TROUBLESHOOTING

CUSTOMER COMPLAINT ANALYSIS

Record details of the problem (failure, complaint) and how it occurred as described by the customer. For this purpose, use of such an inspection form will facilitate collecting information to the point required for proper analysis and diagnosis.

EXAMPLE: CUSTOMER PROBLEM INSPECTION FORM

User name:	Model:	VIN:	
Date of issue:	Date Reg.	Date of problem:	Mileage:

Malfunction indicator lamp condition (LED)	☐ Always ON ☐ Sometimes ON Always OFF ☐ Good condition
Malfunction display/code (LCD)	User mode: ☐ No display ☐ Malfunction display ( )
	Dealer mode: ☐ No code ☐ Malfunction code ( )

PROBLEM SYMPTOMS	
☐ **Difficult Starting**	☐ **Poor Driveability**
☐ No cranking	☐ Hesitation on acceleration
☐ No initial combustion	☐ Back fire/☐ After fire
☐ No combustion	☐ Lack of power
☐ Poor starting at	☐ Surging
(☐ cold ☐ warm ☐ always)	☐ Abnormal knocking
☐ Other _____	☐ Engine rpm jumps briefly
	☐ Other _____
☐ **Poor Idling**	☐ **Engine Stall when**
☐ Poor fast Idle	☐ Immediately after start
☐ Abnormal idling speed	☐ Throttle valve is opened
(☐ High ☐ Low) (r/min)	☐ Throttle valve is closed
☐ Unstable	☐ Load is applied
☐ Hunting (r/min. to r/min)	☐ Other _____
☐ Other _____	
☐ OTHERS:	

MOTORCYCLE/ENVIRONMENTAL CONDITION WHEN PROBLEM OCCURS	
Environmental condition	
Weather	☐ Fair ☐ Cloudy ☐ Rain ☐ Snow ☐ Always ☐ Other
Temperature	☐ Hot ☐ Warm ☐ Cool ☐ Cold (°F/ °C) ☐ Always
Frequency	☐ Always ☐ Sometimes (times/ day, month) ☐ Only once ☐ Under certain condition
Road	☐ Urban ☐ Suburb ☐ Highway ☐ Mountainous (☐ Uphill ☐ Downhill) ☐ Tarmacadam ☐ Gravel ☐ Other
Motorcycle condition	
Engine condition	☐ Cold ☐ Warming up phase ☐ Warmed up ☐ Always ☐ Other at starting ☐ Immediately after start ☐ Racing without load ☐ Engine speed (r/min)
Motorcycle condition	During driving: ☐ Constant speed ☐ Accelerating ☐ Decelerating ☐ Right hand corner ☐ Left hand corner ☐ At stop ☐ Motorcycle speed when problem occurs (km/h, Mile/h) ☐ Other _____

NOTE:

** The above form is a standard sample. It should be modified according to conditions characteristic of each market.*

SELF-DIAGNOSTIC PROCEDURES

- Don't disconnect couplers from ECM, battery cable from battery, ECM ground wire harness from engine or main fuse before confirming malfunction code (self-diagnostic trouble code) stored in memory. Such disconnection will erase memorized information in ECM memory.
- Malfunction code stored in ECM memory can be checked by the special tool.
- Before checking malfunction code, read SELF-DIAGNOSIS FUNCTION "USER MODE and DEALER MODE" (☞4-14, 15) carefully to have good understanding as to what functions are available and how to use it.

- Be sure to read "PRECAUTIONS for Electrical Circuit Service" (☞4-2) before inspection and observe what is written there.
- Remove the front leg shield cover.
- Connect the special tool to the dealer mode coupler Ⓐ at the wiring harness, and start the engine or crank the engine for more than 4 seconds.
- Turn the special tool's switch ON and check the malfunction code to determine the malfunction part.

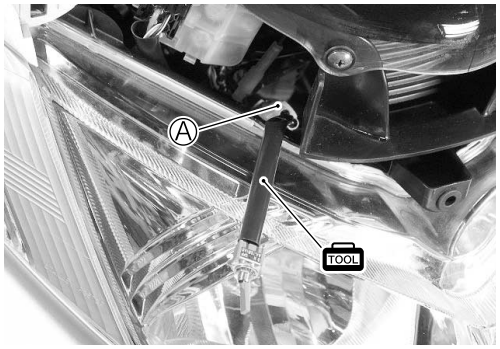

TOOL 09930-82720: Mode select switch

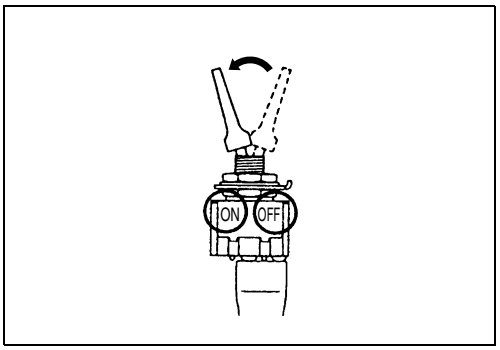

SELF-DIAGNOSIS RESET PROCEDURE

- After repairing the trouble, turn OFF the ignition switch and turn ON again.
- If the malfunction code indicates (C00), the malfunction is cleared.
- Disconnect the special tool from the dealer mode coupler.

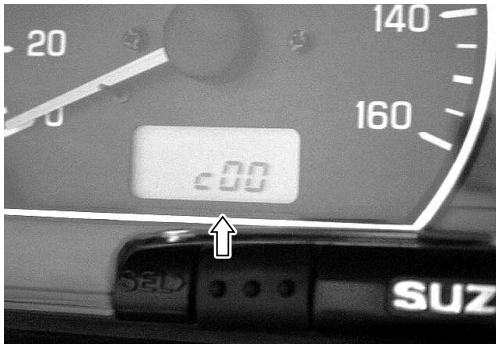

MALFUNCTION CODE AND DEFECTIVE CONDITION

MALFUNCTION CODE	DETECTED ITEM	DETECTED FAILURE CONDITION CHECK FOR
C00	NO FAULT	————
C12	Crankshaft position sensor	The signal does not reach ECM for more than 3 sec. after receiving the starter signal. The crankshaft position sensor wiring and mechanical parts. (Crankshaft position sensor, wiring/coupler connection)
C13	Intake air pressure sensor	The sensor should produce following voltage. (0.30 V ≦ sensor voltage < 4.45 V) Without the above range, C13 is indicated. Intake air pressure sensor, wiring/coupler connection.
C14	Throttle position sensor	The sensor should produce following voltage. (0.45 V ≦ sensor voltage < 4.80 V) Without the above range, C14 is indicated. Throttle position sensor, wiring/coupler connection.
C15	Engine coolant temperature sensor	The sensor voltage should be the following. (0.20 V ≦ sensor voltage < 4.80 V) Without the above range, C15 is indicated. Engine coolant temperature sensor, wiring/coupler connection.
C21	Intake air temperature sensor	The sensor voltage should be the following. (0.20 V ≦ sensor voltage < 4.80 V) Without the above range, C21 is indicated. Intake air temperature sensor, wiring/coupler connection.
C23	Tip over sensor	The sensor voltage should be the following for more than 2 sec. after ignition switch turns ON. (0.40 V ≦ sensor voltage < 4.60 V) Without the above value, C23 is indicated. Tip over sensor, wiring/coupler connection.
C24	Ignition signal	Crankshaft position sensor (pick-up coil) signal is produced but signal from ignition coil is interrupted continuous by 2 times or more. In this case, the code C24 is indicated. Ignition coil, wiring/coupler connection, power supply from the battery.
C32	Fuel injector	Crankshaft position sensor (pick-up coil) signal is produced but fuel injector signal is interrupted continuous by 2 times or more. In this case, the code C32 is indicated. Injector, wiring/coupler connection, power supply to the injector.
C40	Idle air control (IAC) valve	No IAC valve voltage is supplied after starting the engine. IAC valve, wiring/coupler connection.
C41	Fuel pump relay	No voltage is applied to fuel pump although fuel pump relay is turned ON, or voltage is applied to fuel pump although fuel pump relay is turned OFF. Fuel pump relay, connecting lead, power source to fuel pump relay.
C42	Ignition switch	Ignition switch signal is not input in the ECM. Ignition switch, lead wire/coupler.

C44	Heated oxygen sensor (HO2S) [E-09, 19, 54]	During O2 feedback control, O2 sensor voltage is higher than the specification or lower than the specification. No signal is detected during engine operation, or no electrical power is supplied from battery.
		HO2S lead wire/coupler connection. Battery voltage supply to the HO2S.

"C12" CKP SENSOR CIRCUIT MALFUNCTION

DETECTED CONDITION	POSSIBLE CAUSE
No CKP sensor signal for more than 2 seconds after receiving the starter signal.	• Metal particles or foreign materiel being attached on the CKP sensor and rotor tip. • CKP sensor circuit open or short. • CKP sensor malfunction. • ECM malfunction.

INSPECTION

Step1

1) Remove the front box. (☞7-14)
2) Turn the ignition switch OFF.
3) Check the CKP sensor coupler ① for loose or poor contacts. If OK, then measure the CKP sensor resistance.

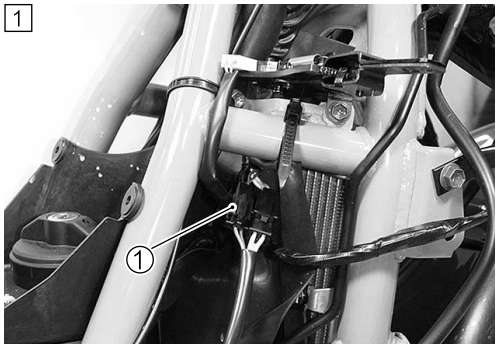

4) Disconnect the CKP sensor coupler ① and measure the resistance.

DATA CKP sensor resistance: 180 – 280 Ω (Blue – Green)

5) If OK, then check the continuity between each terminal and ground.

DATA CKP sensor continuity: ∞ Ω (Infinity) (Blue – Ground) (Green – Ground)

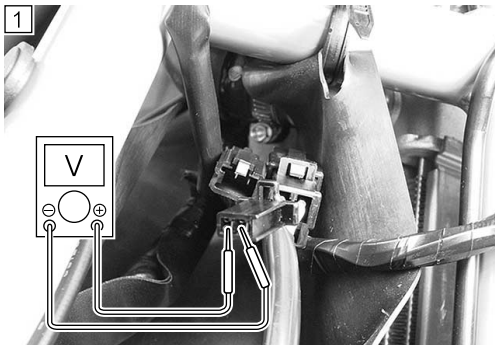

TOOL 09900-25008: Multi circuit tester set

Tester knob indication: Resistance (Ω)

Are the resistance and continuity OK?

YES	Go to step 2.
NO	Replace the CKP sensor with a new one.

Step2

1) Disconnect the CKP sensor coupler.

2) Crank the engine a few seconds with the starter motor, and measure the CKP sensor peak voltage at the coupler.

DATA CKP sensor peak voltage: 4.5 V and more
(⊖ Blue – ⊕ Green)

3) Repeat the above test procedure a few times and measure the highest peak voltage.
   If OK, then measure the CKP sensor peak voltage at the ECM terminals. (① – ②)

TOOL 09900-25008: Multi circuit tester set

Tester knob indication: voltage (⎓)

Is the voltage OK?

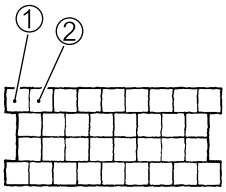

ECM coupler

YES	• Blue or Green wire open or shorted to ground, or poor ① or ② connection. • If wire and connection are OK, intermittent trouble or faulty ECM. • Recheck each terminal and wire harness for open circuit and poor connection.
NO	• Loose or poor contacts on the CKP sensor coupler or ECM coupler. • Replace the CKP sensor with a new one.

"C13" IAP SENSOR CIRCUIT MALFUNCTION

DETECTED CONDITION	POSSIBLE CAUSE
IAP sensor voltage low or high. (0.30 V ≦ Sensor voltage < 4.45 V) (without the above range.) *NOTE:* *Note that atmospheric pressure varies depending on weather conditions as well as altitude.* *Take that into consideration when inspecting voltage.*	• Clogged vacuum passage between throttle body and IAP sensor. • Air being drawn from vacuum passage between throttle body and IAP sensor. • IAP sensor circuit open or shorted to ground. • IAP sensor malfunction. • ECM malfunction.

INSPECTION

Step 1

1) Remove the front trunk box cover. (☞7-18)
2) Turn the ignition switch OFF.
3) Check the IAP sensor coupler ① for loose or poor contacts.
   If OK, then measure the IAP sensor input voltage.

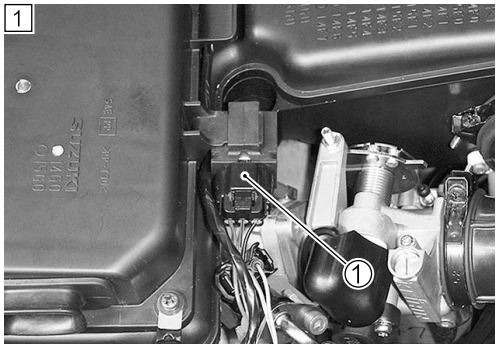

4) Disconnect the IAP sensor coupler ①.
5) Turn the ignition switch ON.
6) Measure the voltage at the Red wire and ground.
   If OK, then measure the voltage at the Red wire and B/Br wire.

DATA IAP sensor input voltage: 4.5 – 5.5 V
(⊕ Red – ⊖ Ground)
(⊕ Red – ⊖ B/Br)

TOOL 09900-25008: Multi circuit tester set

Tester knob indication: Voltage (⎓)

Is the voltage OK?

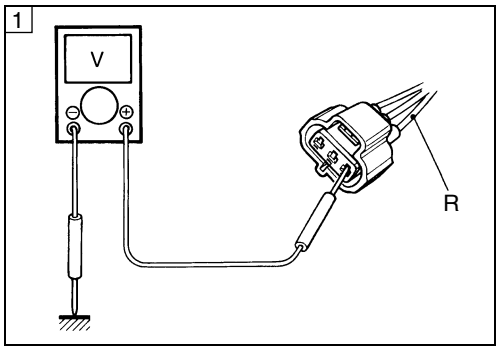

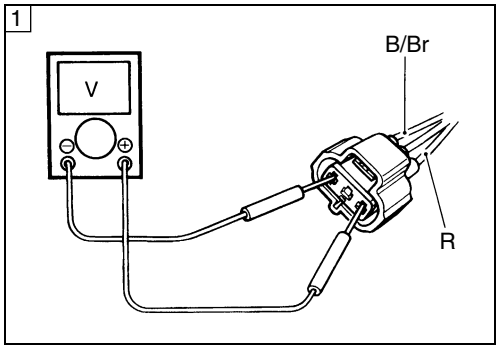

YES	Go to Step 2
NO	• Loose or poor contacts on the ECM coupler. • Open or short circuit in the Red wire or B/Br wire.

Step 2

1) Connect the IAP sensor coupler.
2) Insert the copper wires to the lead wire coupler.
   Start the engine at idle speed.
3) Measure the IAP sensor output voltage at the wire side coupler (between G/B and B/Br wires).

DATA IAP sensor output voltage:Approx. 2.6 V at idle speed (⊕ G/B – ⊖ B/Br)

TOOL 09900-25008: Multi circuit tester set

Tester knob indication : Voltage (⎓)

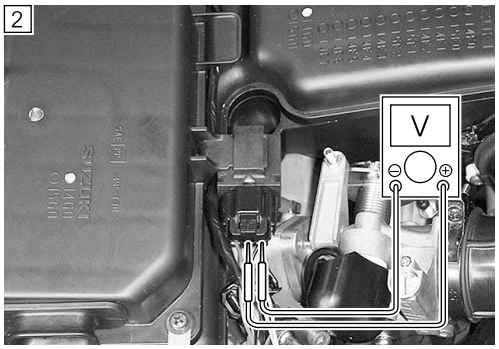

YES	Go to Step 3
NO	• Check the vacuum hose for crack or damage. • Open or short circuit in the G/B wire. • Replace the IAP sensor with a new one.

Step 3

1) Remove the IAP sensor.
2) Connect the vacuum pump gauge to the vacuum port of the IAP sensor.
   Arrange 3 new 1.5 V batteries in series (check that total voltage is 4.5 – 5.0V) and connect ⊖ terminal to the ground terminal and ⊕ terminal to the Vcc terminal.
   Check the voltage between Vout and ground. Also, check if voltage reduces when vacuum is applied up to 400 mmHg by using vacuum pump gauge. (☞4-27)

TOOL 09917-47010: Vacuum pump gauge
09900-25008: Multi circuit tester set

Tester knob indication: Voltage (⎓)

Is the voltage OK?

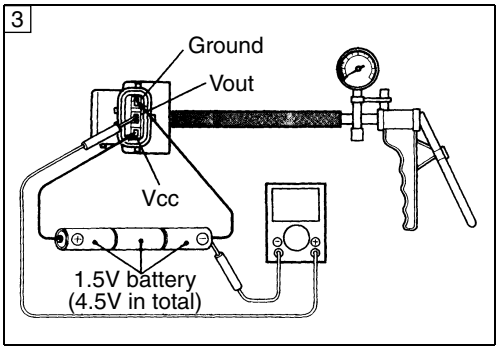

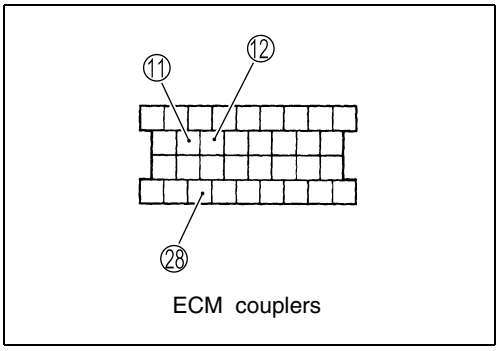

YES	• Red, G/B or B/Br wire open or shorted to ground, or poor ⑪, ⑫ or ㉘ connection. • If wire and connection are OK, intermittent trouble or faulty ECM. • Recheck each terminal and wire harness for open circuit and poor connection.
NO	If check result is not satisfactory, replace IAP sensor with a new one.

Output voltage (Vcc voltage 4.5 – 5.0 V, ambient temp. 20 – 30 °C, 68 – 86 °F)

ALTITUDE (Reference)		ATMOSPHERIC PRESSURE		OUTPUT VOLTAGE
(ft)	(m)	(mmHg)	kPa	(V)
0	0	760	100	3.4 – 3.6
|	|	|	|	
2 000	610	707	94	
2 001	611	707	94	3.2 – 3.4
|	|	|	|	
5 000	1 524	634	85	
5 001	1 524	634	85	2.9 – 3.2
|	|	|	|	
8 000	2 438	567	76	
8 001	2 439	567	76	2.7 – 2.9
|	|	|	|	
10 000	3 048	526	70	

"C14" TP SENSOR CIRCUIT MALFUNCTION

DETECTED CONDITION	POSSIBLE CAUSE
Output voltage low or high (0.45 ≦ Sensor voltage < 4.80 V) (without the above range.)	• TP sensor maladjusted. • TP sensor circuit open or short. • TP sensor malfunction. • ECM malfunction.

INSPECTION

Step 1

1) Remove the side leg shield. (☞7-15)
2) Turn the ignition switch OFF.
3) Check the TP sensor coupler for loose or poor contacts.
   If OK, then measure the TP sensor input voltage.
4) Disconnect the TP sensor coupler ①.

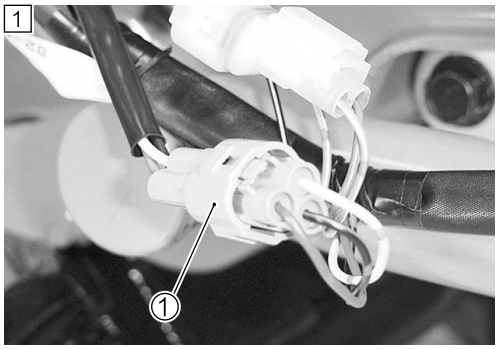

5) Turn the ignition switch ON.
6) Measure the voltage at the Red wire and ground.
7) If OK, then measure the voltage at the Red wire and B/Br wire.

DATA TP sensor input voltage:4.5 – 5.5 V
(⊕ Red – ⊖ Ground)
(⊕ Red – ⊖ B/Br)

TOOL 09900-25008: Multi circuit tester set

Tester knob indication: Voltage (⎓)

Is the voltage OK?

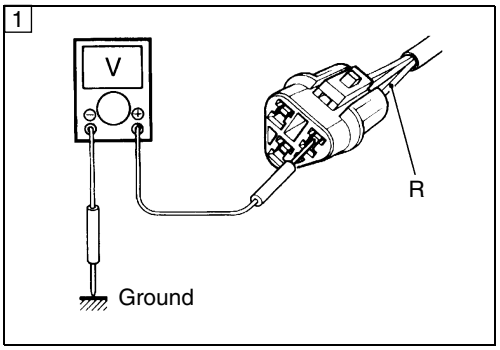

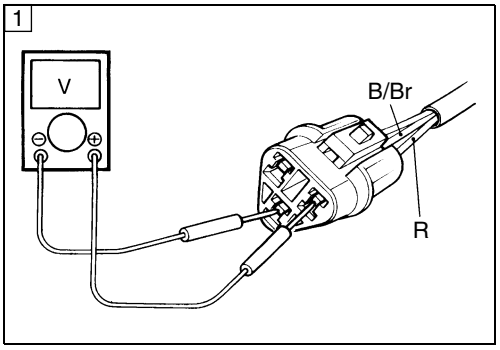

YES	Go to Step 2
NO	• Loose or poor contacts on the ECM coupler. • Open or short circuit in the Red wire or B/Br wire.

Step 2

1) Turn the ignition switch OFF.
2) Disconnect the TP sensor coupler.
3) Check the continuity between Yellow wire and ground.

DATA TP sensor continuity: ∞ Ω (Infinity)
(Yellow wire – Ground)

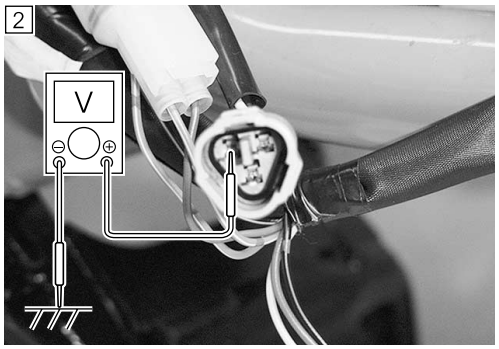

4) If OK, then measure the TP sensor resistance at the coupler (between Yellow and B/Br wires).
5) Turn the throttle grip and measure the resistance.

DATA TP sensor resistance
Throttle valve is closed : Approx. 0.6 kΩ
Throttle valve is opened: Approx. 3.8 kΩ

TOOL 09900-25008: Multi circuit tester set

Tester knob indication: Resistance (Ω)

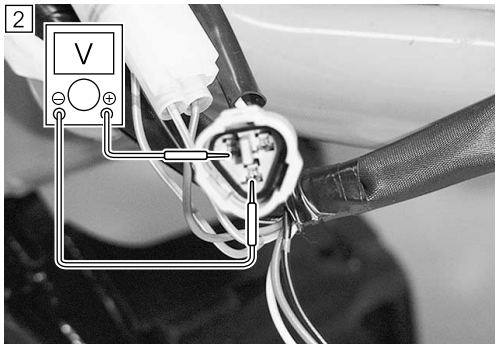

Are the resistance and continuity OK?

YES	Go to Step 3
NO	• Reset the TP sensor position correctly. • Replace the TP sensor with a new one.

Step 3

1) Connect the TP sensor coupler.
2) Insert the copper wires to the lead wire coupler.
3) Turn the ignition switch ON.
   Measure the TP sensor output voltage at the coupler (between ⊕ Yellow and ⊖ B/Br) by turning the throttle grip.

DATA TP sensor output voltage
Throttle valve is closed : Approx. 0.6 V
Throttle valve is opened: Approx. 3.8 V

TOOL 09900-25008: Multi circuit tester set

Tester knob indication: Voltage (⎓)

Is the voltage OK?

YES	• Red, Yellow or B/Br wire open or shorted to ground, or poor ⑪, ⑭ or ㉘ connection. • If wire and connection are OK, intermittent trouble or faulty ECM. • Recheck each terminal and wire harness for open circuit and poor connection.
NO	If check result is not satisfactory, replace TP sensor with a new one.

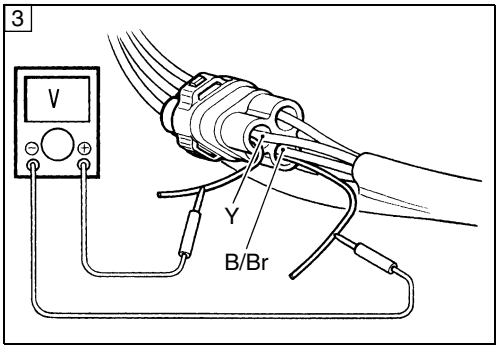

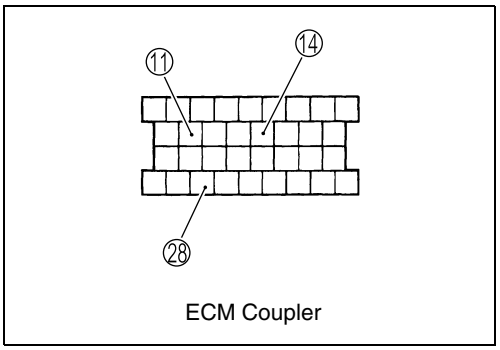

"C15" ECT SENSOR CIRCUIT MALFUNCTION

DETECTED CONDITION	POSSIBLE CAUSE
Output voltage low or high (0.20 ≦ Sensor voltage < 4.80 V) (without the above range.)	• ECT sensor circuit open or short. • ECT sensor malfunction. • ECM malfunction.

INSPECTION

Step 1

1) Remove the foot board. (☞7-19)
2) Turn the ignition switch OFF.
3) Check the ECT sensor coupler for loose or poor contacts. If OK, then measure the ECT sensor voltage at the wire side coupler.
4) Disconnect the coupler and turn the ignition switch ON.
5) Measure the voltage between Dg wire terminal and ground.
6) If OK, then measure the voltage between Dg wire terminal and B/Br wire terminal.

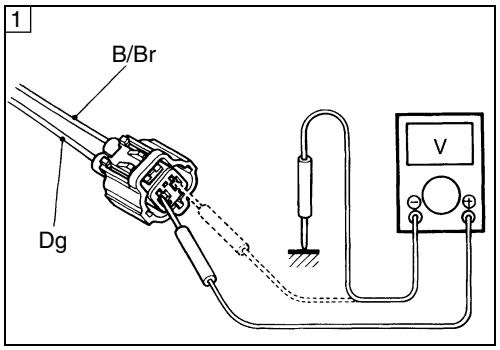

DATA ETC sensor voltage: 4.5 – 5.5 V
(⊕ Dg – ⊖ Ground)
(⊕ Dg – ⊖ B/Br)

TOOL 09900-25008: Multi circuit tester set

Tester knob indication: Voltage (⎓)

Is the voltage OK?

YES	Go to Step 2
NO	• Loose or poor contacts on the ECM coupler. • Open or short circuit in the Dg wire or B/Br wire.

Step 2

1) Turn the ignition switch OFF.
2) Measure the ECT sensor resistance.

DATA ECT sensor resistance:
Approx. 1.14 kΩ at 40 °C (104 °F) (Terminal – Terminal)

TOOL 09900-25008: Multi circuit tester set

Tester knob indication: Resistance (Ω)

Refer to page 6-9 for details.
Is the resistance OK?

YES	• Dg or B/Br wire open or shorted to ground, or poor ④ or ⑪ connection. • If wire and connection are OK, intermittent trouble or faulty ECM. • Recheck each terminal and wire harness for open circuit and poor connection.
NO	Replace the ECT sensor with a new one.

Engine Coolant Temp	Resistance
20 °C (68 °F)	Approx. 2.58 kΩ
40 °C (104 °F)	Approx. 1.14 kΩ
80 °C (176 °F)	Approx. 0.28 kΩ
100 °C (212 °F)	Approx. 0.155 kΩ

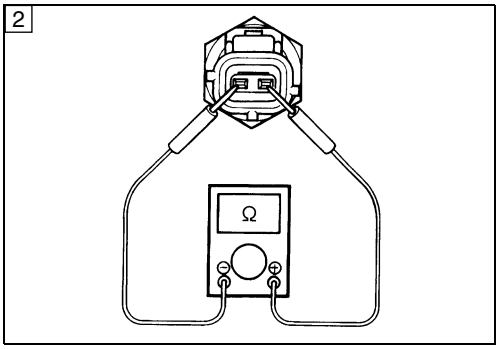

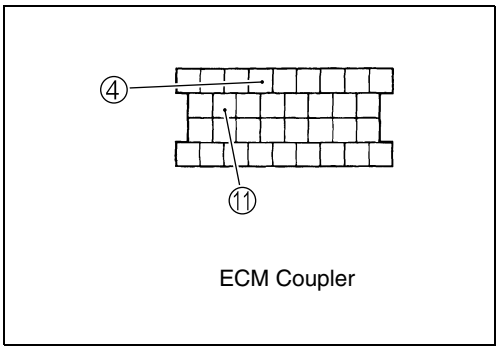

"C21" IAT SENSOR CIRCUIT MALFUNCTION

DETECTED CONDITION	POSSIBLE CAUSE
Output voltage low or high (0.20 ≦ Sensor voltage < 4.80 V) (without the above range.)	• IAT sensor circuit open or short. • IAT sensor malfunction. • ECM malfunction.

INSPECTION

Step 1

1) Remove the frame cover. (☞7-18)
2) Turn the ignition switch OFF.
3) Check the IAT sensor coupler for loose or poor contacts.
   If OK, then measure the IAT sensor voltage at the wire side coupler.
4) Disconnect the coupler ① and turn the ignition switch ON.

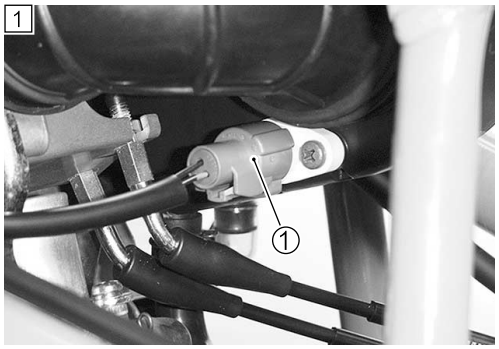

5) Measure the voltage between B/Bl wire terminal and ground.
6) If OK, then measure the voltage between B/Bl wire terminal and B/Br wire terminal.

DATA IAT sensor voltage: 4.5 – 5.5 V
(⊕ B/Bl – ⊖ Ground)
(⊕ B/Bl – ⊖ B/Br)

TOOL 09900-25008: Multi circuit tester set

Tester knob indication: Voltage (⎓)

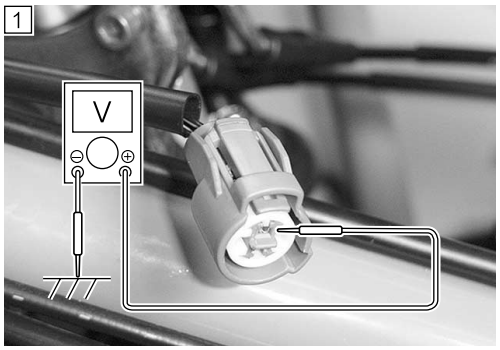

Is the voltage OK?

YES	Go to Step 2
NO	• Loose or poor contacts on the ECM coupler. • Open or short circuit in the B/Bl wire or B/Br wire.

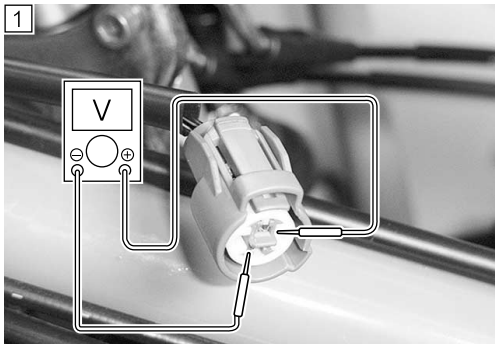

Step 2

1) Turn the ignition switch OFF.
2) Measure the IAT sensor resistance.

DATA IAT sensor resistance:
Approx. 1.14 kΩ at 40 °C (104 °F) (Terminal – Terminal)

TOOL 09900-25008: Multi circuit tester set

Tester knob indication: Resistance (Ω)

Is the resistance OK?

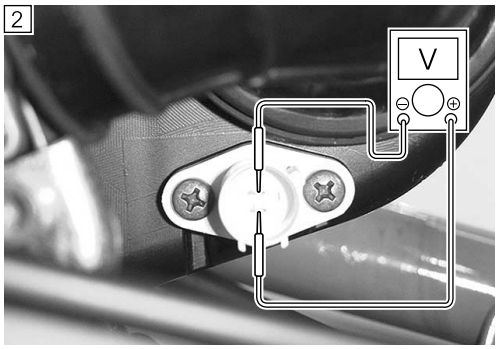

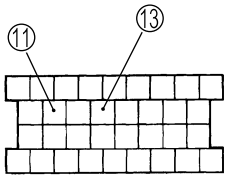

ECM Coupler

YES	• B/Bl or B/Br wire open or shorted to ground, or poor ⑪ or ⑬ connection. • If wire and connection are OK, intermittent trouble or faulty ECM. • Recheck each terminal and wire harness for open circuit and poor connection.
NO	Replace the IAT sensor with a new one.

Intake Air Temp	Resistance
20 °C (68 °F)	Approx. 2.58 kΩ
40 °C (104 °F)	Approx. 1.14 kΩ
80 °C (176 °F)	Approx. 0.28 kΩ
100 °C (212 °F)	Approx. 0.155 kΩ

NOTE:
IAT sensor resistance measurement method is the same way as that of the ECT sensor. Refer to page 6-9 for details.

"C23" TO SENSOR CIRCUIT MALFUNCTION

DETECTED CONDITION	POSSIBLE CAUSE
Output voltage low or high (0.40 ≦ Sensor voltage < 4.60 V) (without the above range.)	• TO sensor circuit open or short. • TO sensor malfunction. • ECM malfunction.

INSPECTION

Step 1

1) Remove the front meter panel. (☞7-13)
2) Turn the ignition switch OFF.
3) Check the TO sensor coupler for loose or poor contacts. If OK, then measure the TO sensor resistance.
4) Disconnect the TO sensor coupler.
5) Measure the resistance between Red wire and B/Br wire terminals.

DATA TO sensor resistance: 19.1 – 19.7 kΩ (Red – B/Br)

TOOL 09900-25008: Multi circuit tester set

Tester knob indication: Resistance (Ω)

Is the resistance OK?

YES	Go to Step 2
NO	Replace the TO sensor with a new one.

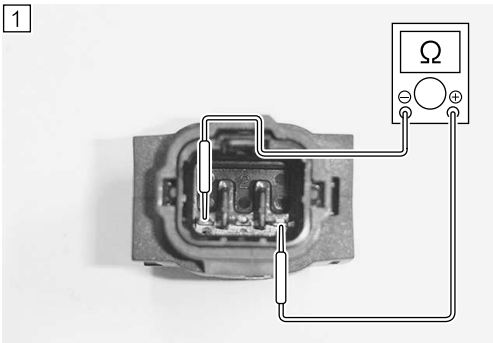

Step 2

1) Connect the TO sensor coupler.
2) Insert the copper wires to the lead wire coupler.
3) Turn the ignition switch ON.
4) Measure the voltage at the wire side coupler between Br/W and B/Br wires.

DATA TO sensor voltage: 1.3 V and less
(⊕ Br/W – ⊖ B/Br)

Also, measure the voltage when leaning of the motorcycle.

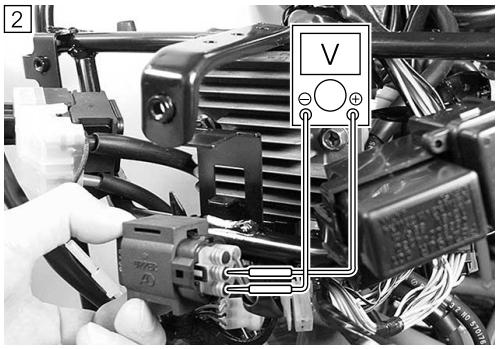

5) Dismount the TO sensor from its bracket and measure the voltage when it is leaned more than 70 °, left and right, from the horizontal level.

DATA TO sensor voltage: 3.8 V and more
(⊕ Br/W – ⊖ B/Br)

TOOL 09900-25008: Multi circuit tester set

Tester knob indication: Voltage (⎓)

Is the voltage OK?

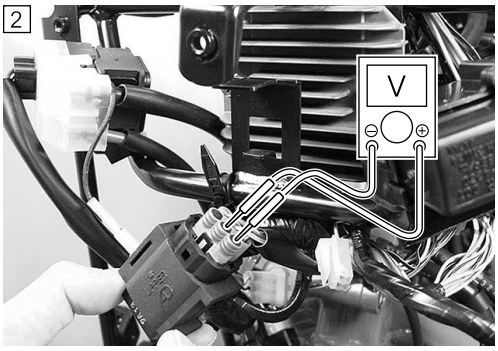

YES	• Red, Br/W or B/Br wire open or shorted to ground, or poor ㉘ or ㉙ connection. • If wire and connection are OK, intermittent trouble or faulty ECM. • Recheck each terminal and wire harness for open circuit and poor connection.
NO	• Loose or poor contacts on the ECM coupler. • Open or short circuit. • Replace the TO sensor with a new one.

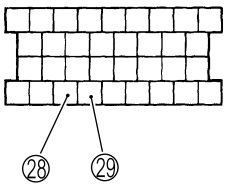

ECM Coupler

"C24" IGINTION SYSTEM MALFUNCTION

***Refer to the IGNITION SYSTEM for details. (☞8-23)**

"C32" FUEL INJECTOR CIRCUIT MALFUNCTION

DETECTED CONDITION	POSSIBLE CAUSE
CKP signals produced but fuel injector signal is interrupted continuous by 2 times or more.	• Injector circuit open or short. • Injector malfunction. • ECM malfunction.

INSPECTION

Step 1

1) Remove the frame cover. (☞7-18)
2) Turn the ignition switch OFF.
3) Check the injector coupler ① for loose or poor contacts.
   If OK, then measure the injector resistance.

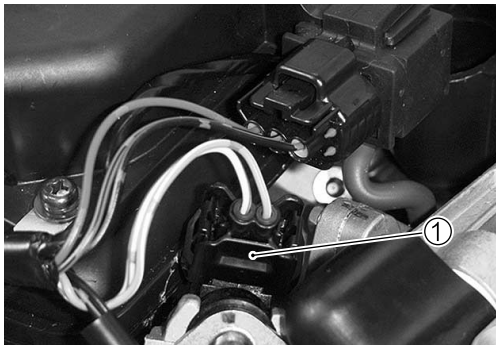

4) Disconnect the injector coupler and measure the resistance between terminals.

DATA Injector resistance: 10 – 18 Ω at 20 °C (68 °F)
(Terminal – Terminal)

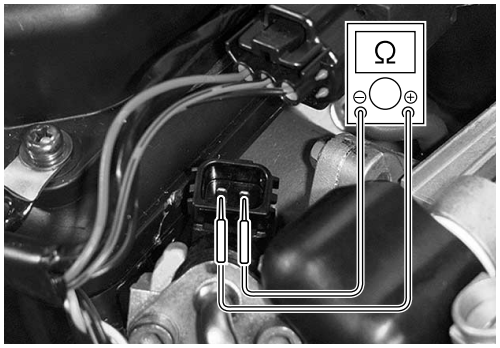

5) If OK, then check the continuity between each terminal and ground.

DATA Injector continuity: ∞ Ω (Infinity)
(Terminal – Ground)

TOOL 09900-25008: Multi circuit tester set

Tester knob indication: Resistance (Ω)

Is the resistance OK?

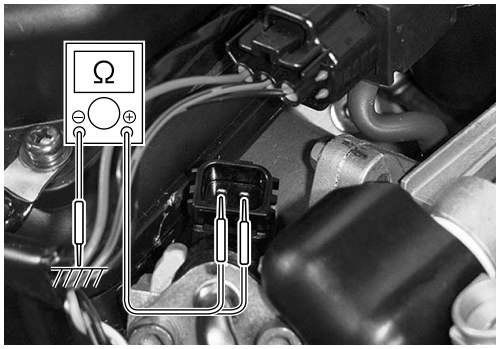

YES	Go to Step 2
NO	Replace the Injector with a new one. (☞5-16)

Step 2

1) Turn the ignition switch ON.
2) Measure the injector voltage between Y/R wire and ground.

DATA Injector voltage: Battery voltage
(⊕ Y/R – ⊖ Ground)

NOTE:
Injector voltage can be detected only 3 seconds after ignition switch is turned ON.

TOOL 09900-25008: Multi circuit tester set

Tester knob indication: Voltage (⎓)

Is the voltage OK?

YES	• Gr/W wire open or shorted to ground, or poor ㉔ or ㉝ connection. • If wire and connection are OK, intermittent trouble or faulty ECM. • Recheck each terminal and wire harness for open circuit and poor connection.
NO	Open circuit in the Y/R wire.

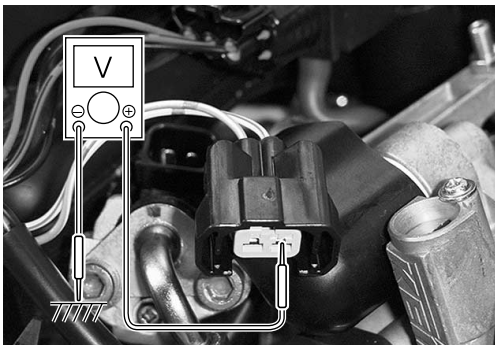

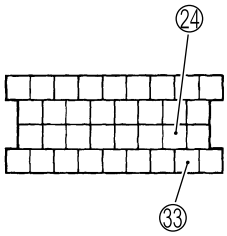

ECM Coupler

"C40" IAC VALVE CIRCUIT MALFUNCTION

DETECTED CONDITION	POSSIBLE CAUSE
No IAC valve voltage is supplied after starting the engine.	• IAC valve circuit open or short. • IAC valve malfunction. • ECM malfunction.

INSPECTION

Step 1

1) Remove the frame cover. (☞7-18)
2) Turn the ignition switch OFF.
3) Check the IAC valve coupler ① for loose or poor contacts.
   If OK, then measure the IAC valve resistance.
4) Disconnect the IAC valve coupler ①.
5) Check the resistance between the terminals of the IAC valve.

DATA Resistance: Approx. 3 – 9 Ω
(at 20 – 24 °C / 68 – 75 °F)

TOOL 09900-25008: Multi circuit tester set

Tester knob indication: Resistance (Ω)

Is the resistance OK?

YES	Go to Step 2
NO	Replace the IAC valve with a new one.

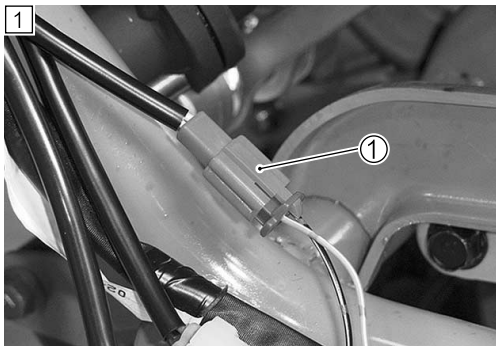

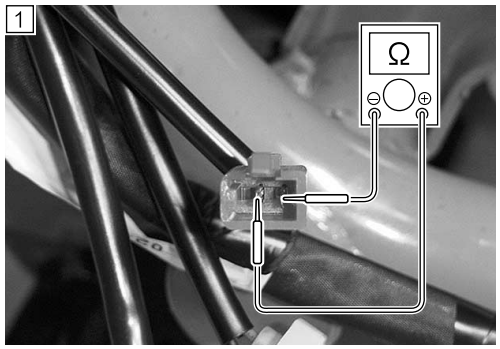

Step 2

1) Remove the IAC valve cover ①.
2) Connect the 12 V battery to the IAC valve terminals for more than 3 minutes and check for change of the IAC valve temperature from the cold condition.
   Is the IAC valve warm up?

YES	GO to Step 3
NO	Replace the IAC valve with a new one.

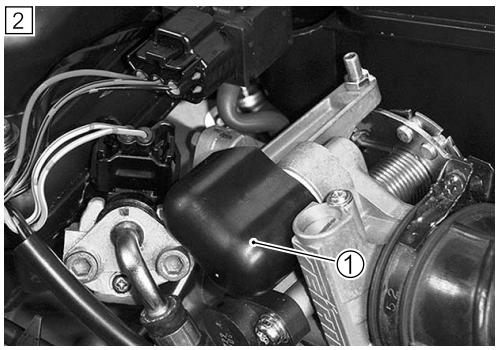

Step 3

1) Turn the ignition switch ON.
2) Measure the IAC valve voltage between B/Y wire and ground.

DATA IAC valve voltage: Battery voltage
(⊕ B/Y – ⊖ Ground)

TOOL 09900-25008: Multi circuit tester set

Tester knob indication: Voltage (⎓)

Is the voltage OK?

YES	Open circuit in the B/Y wire.
NO	• O/W or B/Y wire open or shorted to ground, or poor ㉖ or ㉜ connection. • If wire and connection are OK, intermittent trouble or faulty ECM. • Recheck each terminal and wire harness for open circuit and poor connection.

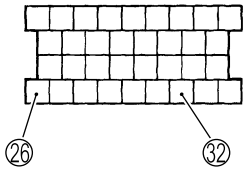

ECM Coupler

“C41” FP RELAY CIRCUIT MALFUNCTION

DETECTED CONDITION	POSSIBLE CAUSE
No voltage is applied to fuel pump although fuel pump relay is turned ON, or voltage is applied to fuel pump although fuel pump relay is turned OFF.	• Fuel pump relay circuit open or short. • Fuel pump relay malfunction. • ECM malfunction.

INSPECTION
Step 1
1) Remove the front leg shield. (☞7-12)
2) Turn the ignition switch OFF.
3) Check the FP relay coupler ① for loose or poor contacts.
4) If OK, then check the insulation and continuity. Refer to page 5-9 for details.
   Is the FP relay OK?

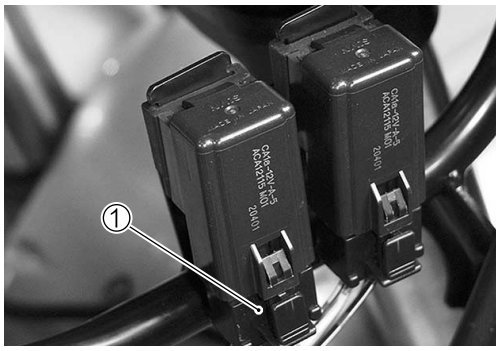

YES	• Y/G or O/W wire open or shorted to ground, or poor ⑰ or ㉖ connection. • If wire and connection are OK, intermittent trouble or faulty ECM. • Recheck each terminal and wire harness for open circuit and poor connection.
NO	Replace the FP relay with a new one.

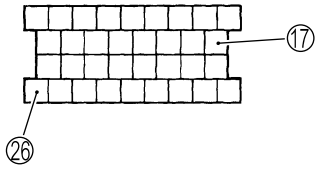

ECM Coupler

“C42” IG SWITCH CIRCUIT MALFUNCTION

DETECTED CONDITION	POSSIBLE CAUSE
Ignition switch signal is not input in the ECM.	• Ignition system circuit open or short. • ECM malfunction.

INSPECTION
***Refer to the IGNITION SWITCH INSPECTION for details. (☞8-33)**

"C44" HO2 SENSOR (HO2S) CIRCUIT MALFUNCTION (E-02, 19, 54)

DETECTED CONDITION	POSSIBLE CAUSE
During O2 feedback control, O2 sensor voltage is higher than the specification or lower than the specification. (Without the above range.) The heater circuit disconnection is detected during engine operation, or no electrical power is supplied from battery.	• HO2 sensor or its circuit open or short. • Fuel system malfunction. • ECM malfunction.

INSPECTION

Step 1

1) Remove the foot board. (☞7-19)
2) Turn the ignition switch OFF.
3) Check the HO2 sensor coupler for loose or poor contacts.
4) Insert the copper wires to the HO2 sensor lead wire coupler.

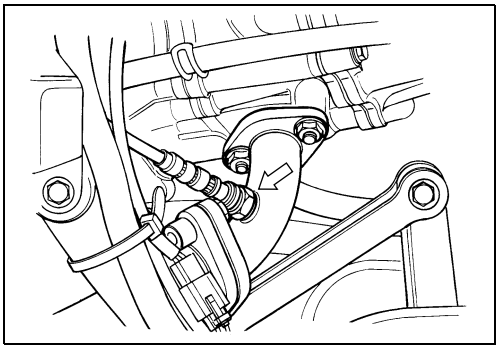

5) Warm up the engine enough.
6) Measure the HO2 sensor output voltage at the coupler (between B/G and Y/W wires) when idling condition.
7) Also, measure the HO2 sensor output voltage while holding the engine speed at 3 000 r/min.

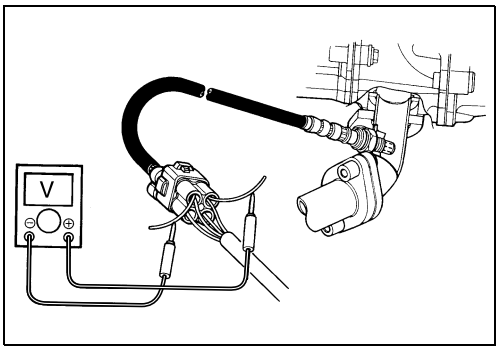

DATA HO2 sensor output voltage at idle speed:
0.4 V and less (⊕ B/G – ⊖ Y/W)
HO2 sensor output voltage at 3 000 r/min:
0.6 V and more (⊕ B/G – ⊖ Y/W)

TOOL 09900-25008: Multi circuit tester set

Tester knob indication: Voltage (⎓)

Is the voltage OK?

YES	Go to Step 2
NO	Replace the HO2 sensor with a new one.

Step 2

1) Turn the ignition switch OFF.
2) Turn the ignition switch ON and measure the heater voltage between O/W wire (ECM side) and ground.
3) If the tester voltage indicates the battery voltage for few seconds, it is good condition.

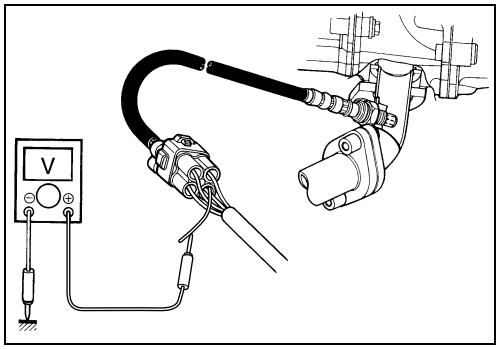

DATA Heater voltage: Battery voltage (O/W – Ground)

NOTE:
Battery voltage can be detected only during few seconds after ignition switch is turned ON.

TOOL 09900-25008: Multi circuit tester set

Tester knob indication: Voltage (⎓)

Is the voltage OK?

YES	Go to Step 3
NO	Replace the HO2 sensor with a new one.

Step 3

1) Turn the ignition switch OFF.
2) Disconnect the HO2 sensor coupler.
3) Check the resistance between the terminals (White – White) of the HO2 sensor.

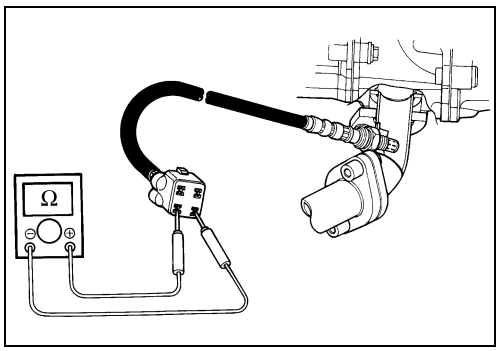

DATA HO2 heater resistance: 11.5 – 14.5 Ω (at 23 °C/73.4 °F) (White – White)

NOTE:
** Temperature of the sensor affects resistance value largely.*
** Make sure that the sensor heater is at correct temperature.*

TOOL 09900-25008: Multi circuit tester set

Tester knob indication: Resistance (Ω)

Is the resistance OK?

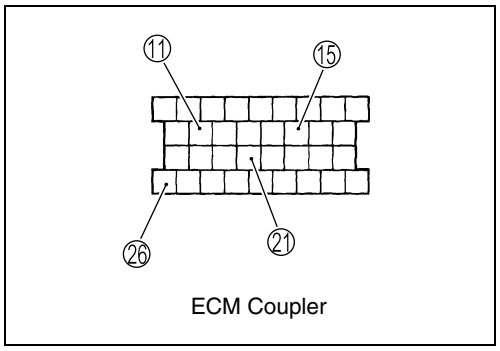

ECM Coupler

YES	• Black, Gray or White wire open or shorted to ground, or poor ⑪, ⑮, ㉑ or ㉖ connection. • If wire and connection are OK, intermittent trouble or faulty ECM. • Recheck each terminal and wire harness for open circuit and poor connection.
NO	Replace the HO2 sensor with a new one.

SENSORS

CKP SENSOR INSPECTION

The crankshaft position sensor is installed in the generator cover. (☞4-23)

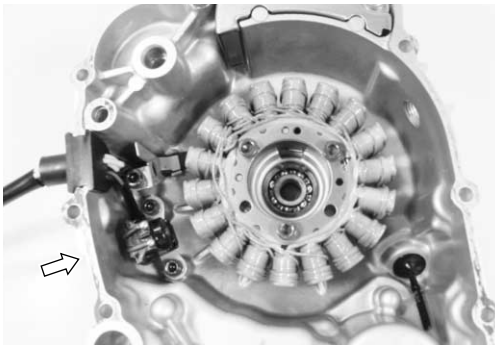

IAP SENSOR INSPECTION

The intake air pressure sensor is installed at the front side of the air cleaner case. (☞4-25)

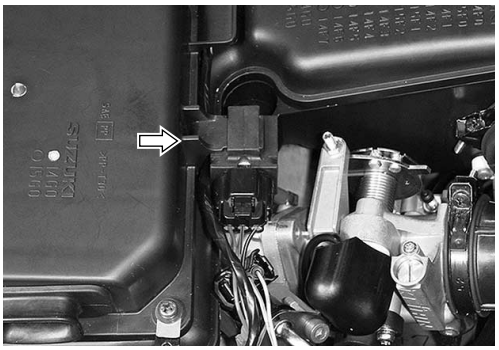

TP SENSOR INSPECTION

The throttle position sensor is installed at the right side of the throttle body. (☞4-28)

TPS SETTING PROCEDURE (☞5-21)

ECT SENSOR INSPECTION

The engine coolant temperature sensor is installed on the cylinder head. (☞4-31)

ECT sensor : 18 N·m (1.8 kgf-m, 13.0 lb-ft)

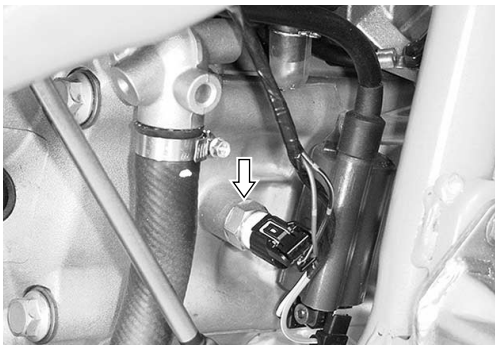

IAT SENSOR INSPECTION

The intake air temperature sensor is installed beneath the air chamber. (☞4-33)

IAT sensor : 3 N·m (0.3 kgf-m, 2.0 lb-ft)

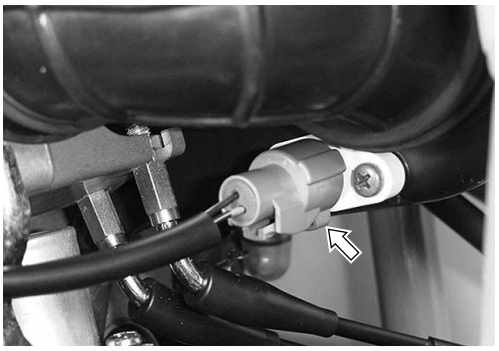

TO SENSOR INSPECTION

The tip over sensor is installed under the combination meter. (☞4-35)

NOTE:

When installing the TO sensor, bring the "UPPER" letter to the top.

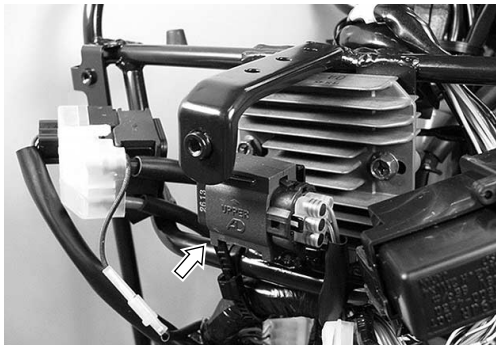

HO2 SENSOR (E-02, 19)

- The heated oxygen sensor is installed on the exhaust pipe. (☞4-42)

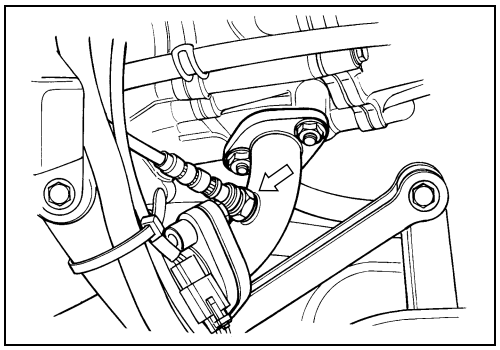

⚠ WARNING

Do not remove the HO2 sensor while it is hot.

CAUTION

*** Be careful not to expose it to excessive shock. Do not use an impact wrench while removing or installing the HO2 sensor unit.**

*** Be careful not to twist or damage the sensor lead wire.**

*** Do not apply oil or other materials to the sensor air hole.**

HO2 SENSOR: 47.5 N·m (4.75 kgf-m, 34.3 lb-ft)

FUEL SYSTEM AND THROTTLE BODY

CONTENTS

⚠ WARNING

Gasoline must be handled carefully in an area well ventilated and away from fire or sparks.

FUEL SYSTEM

① Fuel tank filler cap
② Fuel drain tray
③ Fuel cut valve
④ Gasket
⑤ Fuel tank
⑥ O-ring
⑦ O-ring
⑧ Fuel pressure regulator
⑨ Fuel level gauge
⑩ O-ring
⑪ Fuel mesh filter
⑫ Fuel pump
⑬ Clamp
⑭ Fuel filter

Ⓐ Fuel cut valve bolt
Ⓑ Fuel pump mounting bolt

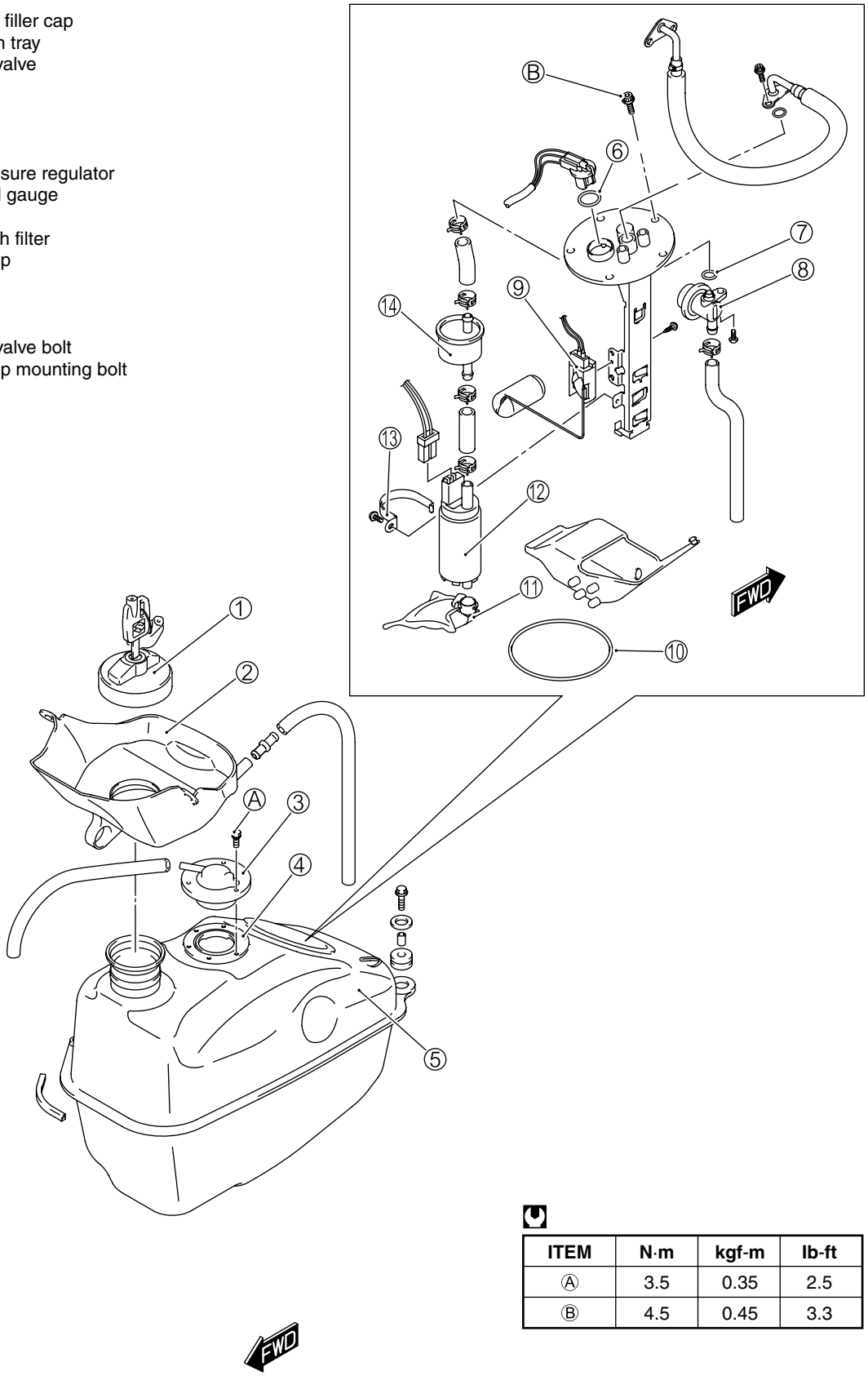

ITEM	N·m	kgf-m	lb-ft
Ⓐ	3.5	0.35	2.5
Ⓑ	4.5	0.45	3.3

REMOVAL AND DISASSEMBLY

- Remove the side leg shield. (☞7-15)
- Remove the front frame cover. (☞7-17)
- Remove the front box. (☞7-14)
- Remove the front wheel and front fender. (☞7-20, 36)
- Remove the radiator. (☞6-4)

- Disconnect the fuel level gauge coupler ①.

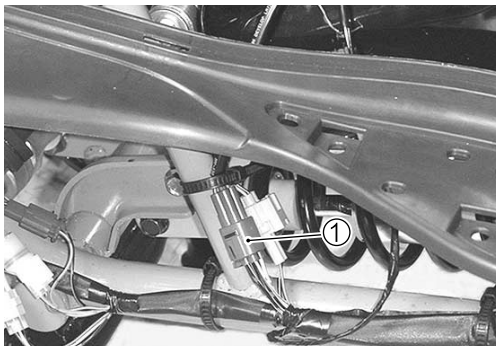

- Remove the fuel feed hose ②.

CAUTION

After disconnecting the fuel feed hose ②, insert a blind plug into the end to stop fuel leakage.

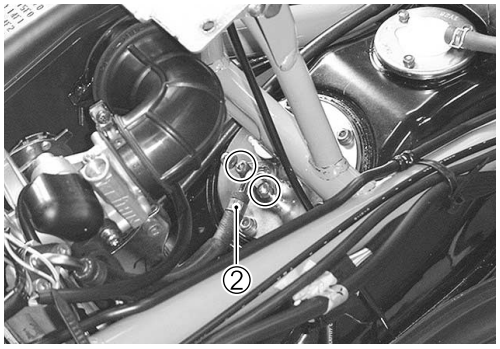

- Remove the bracket ③.
- Remove the clamps ④.

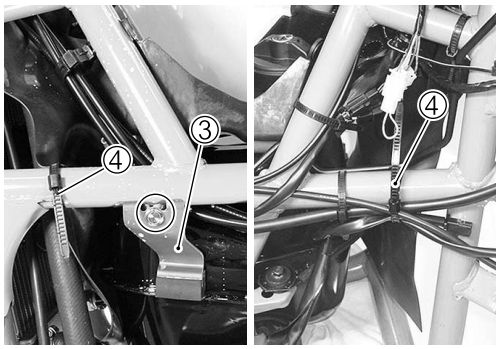

- Remove the fuel tank bolts.
- Remove the fuel tank ⑤ forward.

CAUTION

As gasoline leakage may occur in this operation, keep away from fire and sparks.

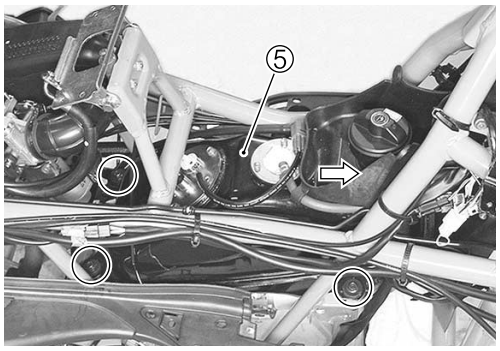

- Remove the fuel tank filler cap ⑥ and fuel drain tray ⑦.

CAUTION

Fit the fuel filler cap ⑥ to the fuel tank after the fuel drain tray ⑦ has been removed.

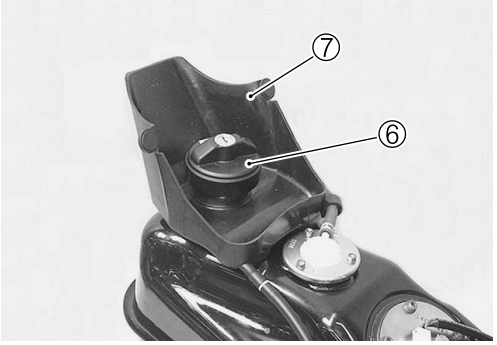

- Remove the FTPC valve ⑧.

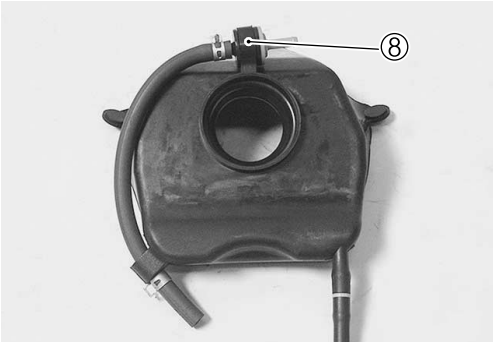

- Remove the fuel pump assembly ⑨.

⚠ WARNING

*** Gasoline is highly flammable and explosive.**
*** Keep heat, spark and flame away.**

- Remove the fuel cut valve ⑩.

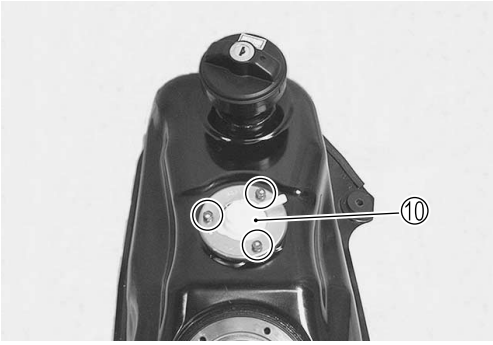

INSPECTION

FUEL CUT VALVE

- Immerse the fuel cut valve into kerosene ① as shown in the right illustration and check that the valve ② operates smoothly and contacts the valve seat ③.

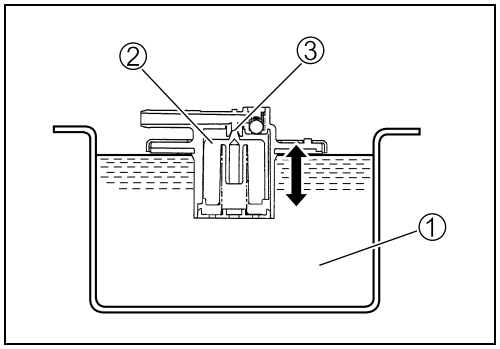

- Using the special tool, apply vacuum to the fuel cut valve ④ and check that the gauge indicator hand deflects.

TOOL 09917-47011: Vacuum pump gauges

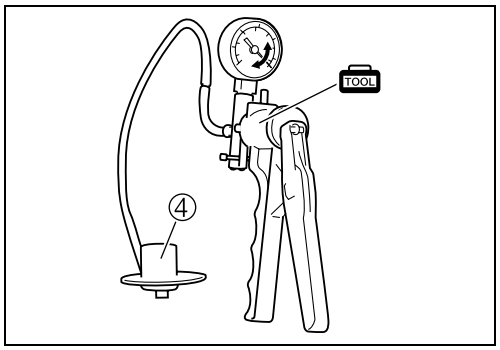

- Check that resistance is felt when blowing air in the fuel cut valve.
- Replace if any abnormal condition is found.

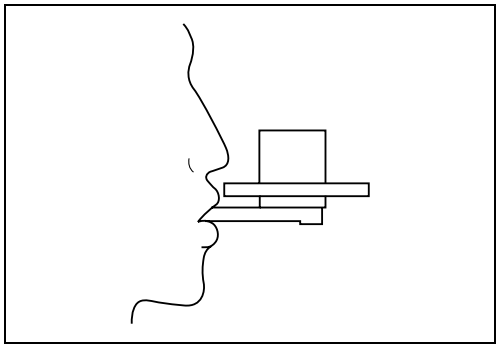

FTPC VALVE

- Check FTPC valve if air can pass trough smoothly when blown from the orange painted side and not from the other side.
- Should any abnormal condition be found, replace the valve with a new one.

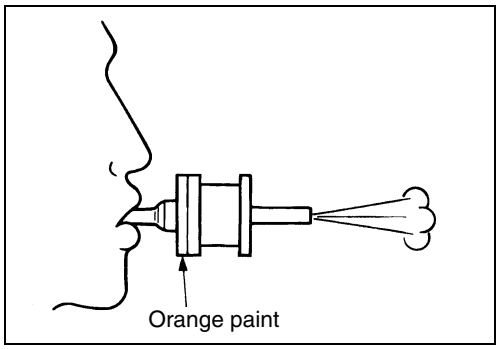

REASSEMBLY AND INSTALLATION

- Reassemble and installation the fuel tank in the reverse order of removal and disassembly.
- Pay attention to the following points:
- Align the protrusion ① of the fuel cut valve with the cutaway ② of the gasket.

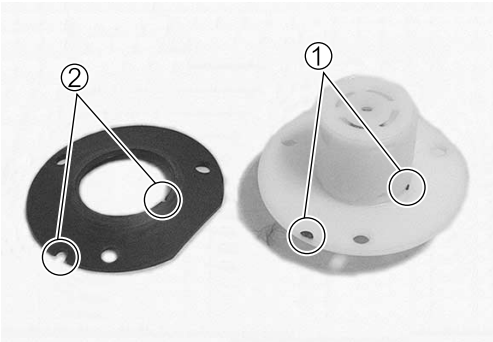

CAUTION

Replace the gasket with a new one.

- Install the fuel cut valve ③.

NOTE:
Install the fuel cut valve so that its hose fitting joint Ⓐ faces the right side of the vehicle.

- Tighten the fuel cut valve bolt to the specified torque.

Fuel cut valve bolt: 3.5 N·m (0.35 kgf-m, 2.5 lb-ft)

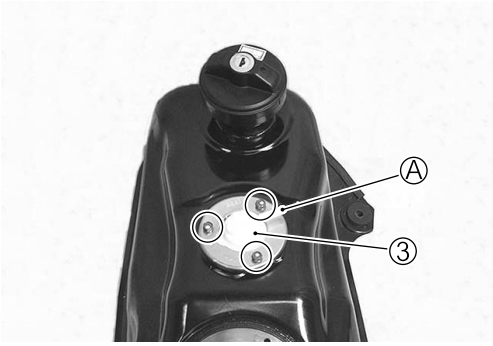

- Apply thin coat of the engine oil to the O-ring ④.
- Install the O-ring to the fuel tank.

CAUTION

Replace the O-ring with a new one.

- When installing the fuel pump assembly, first tighten all the fuel pump assembly mounting bolts lightly in the ascending order of numbers, and then tighten them to the specified torque in the above tightening order.

Fuel pump mounting bolt: 4.5 N·m (0.45 kgf-m, 3.3 lb-ft)

- Install the FTPC valve.

CAUTION

Connect the hose to the black part Ⓐ of the FTPC valve.

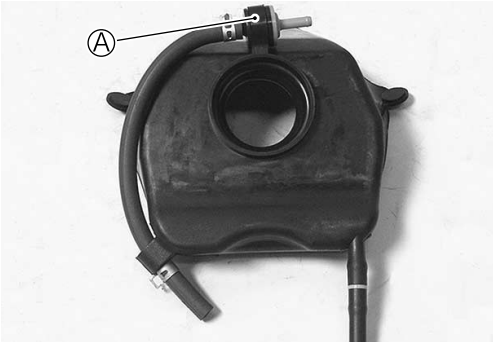

- Install the fuel hose.

CAUTION

Replace the O-ring ④ with a new one.

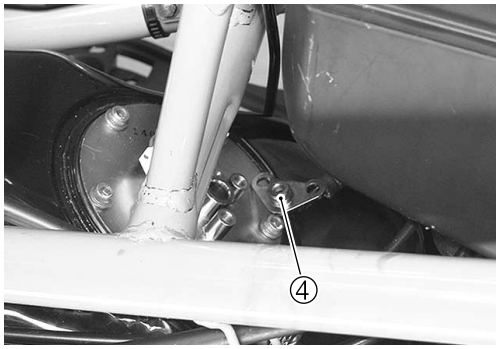

- Tighten the fuel tank bolt to the specified torque.

Fuel tank bolt: 10 N·m (1.0 kgf-m, 7.0 lb-ft)

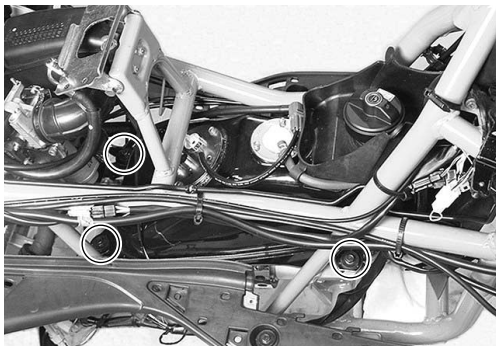

FUEL PRESSURE INSPECTION

- Remove the front frame cover. (☞7-17)
- Place a rag under the fuel feed hose ① and disconnect the fuel feed hose ① from the fuel tank.

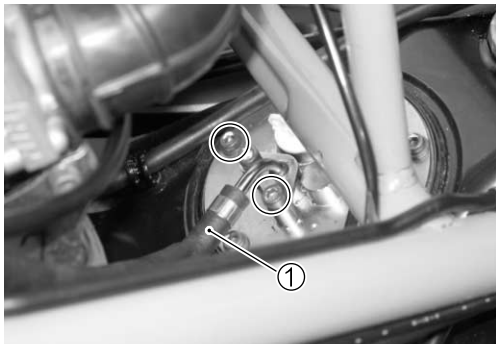

- Install the special tools to the fuel tank.

TOOL 09940-40211: Fuel pressure gauge adaptor
09940-40230: Fuel pressure gauge hose attachment
09915-77331: Oil pressure gauge
09915-74521: Oil pressure gauge hose

- Turn the ignition switch ON and check the fuel pressure.

DATA Fuel pressure: Approx. 300 kPa (3.0 kgf/cm², 43 psi)

- If the fuel pressure is lower than the specification, inspect the following items:

* Fuel hose leakage
* Clogged fuel filter
* Pressure regulator
* Fuel pump

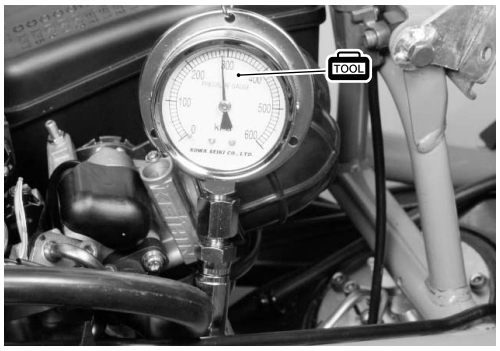

- If the fuel pressure is higher than the specification, inspect the following items:

* Fuel pump check valve
* Pressure regulator

WARNING

*** Before removing the special tools, turn the ignition switch to OFF position and release the fuel pressure slowly.**
*** Gasoline is highly flammable and explosive. Keep heat, spark and flame away.**

FUEL PUMP INSPECTION

- Turn the ignition switch ON and check that the fuel pump operates for few seconds.
- If the fuel pumps motor does not make operating sound, replace the fuel pump assembly or inspect the fuel pump relay and tip over sensor.

FUEL DISCHARGE AMOUNT INSPECTION

WARNING

Gasoline is highly flammable and explosive. Keep heat, spark and flame away.

- Remove the front box. (☞7-14)
- Disconnect the fuel delivery pipe from the fuel injector.
- Place the measuring cylinder and insert the fuel delivery pipe end into the measuring cylinder.

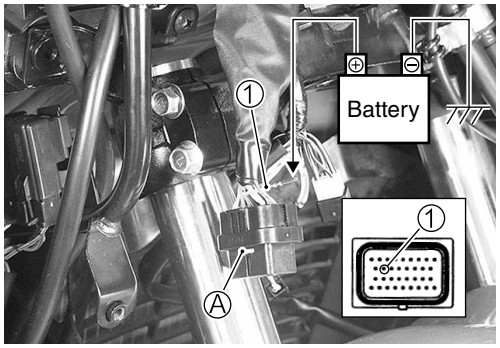

- Disconnect the ECM lead wire coupler.
- With the lead wire's fastener Ⓐ unlocked, pull out the power source lead wire (Yellow with red tracer) ①.
- Apply 12 volts to the fuel pump for 10 seconds and measure the amount of fuel discharged.
- If the pump does not discharge the amount specified, it means that the fuel pump is defective or that the fuel filter is clogged.

DATA **Fuel discharge amount: 35 ml and more/10 sec.**
(1.18/1.23 US/Imp oz)/10 sec.

NOTE:
The battery must be in fully charged condition.

FUEL PUMP RELAY INSPECTION

- Fuel pump relay is located behind the front panel.
- Remove the front leg shield.
- Remove the fuel pump relay.
- First, check the insulation between ① and ② terminals with pocket tester. Then apply 12 volts to ③ and ④ terminals, ⊕ to ③ and ⊖ to ④, and check the continuity between ① and ②.
- If there is no continuity, replace it with a new one.

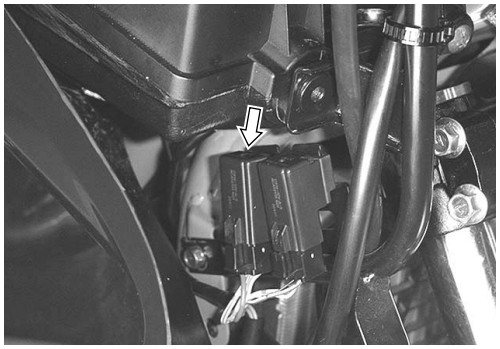

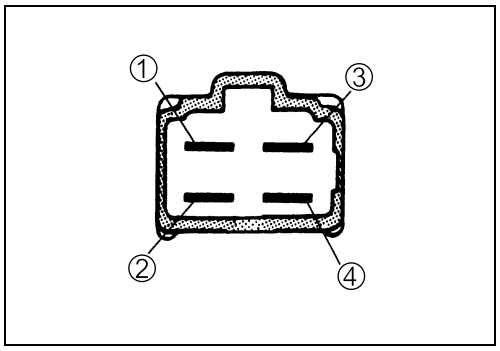

FUEL PUMP AND FUEL LEVEL GAUGE DISASSEMBLY

- Remove the fuel pump assembly. (☞5-6)
- Remove the ground lead wire ① and clamp ②.

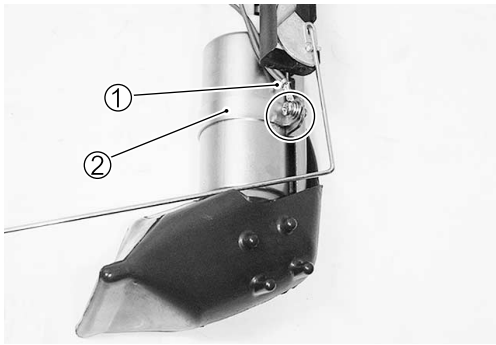

- Remove the fuel pump ③.

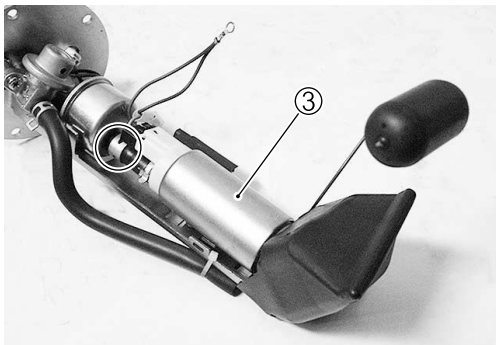

- Remove the fuel pressure regulator ④.

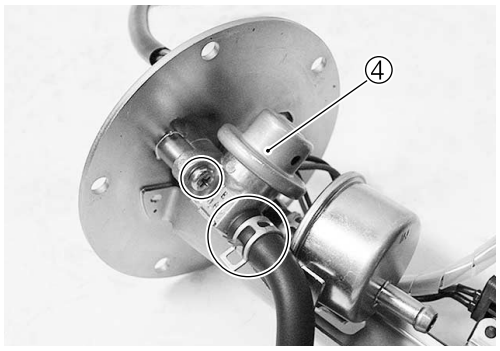

- Remove the fuel filter ⑤.

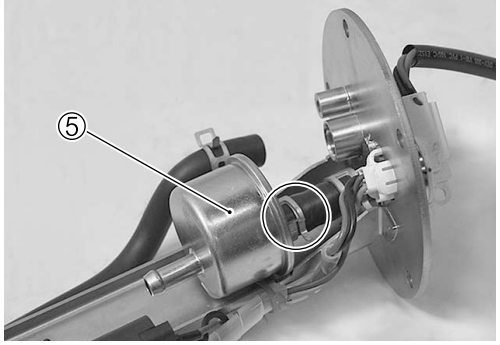

FUEL MESH FILTER INSPECTION AND CLEANING

- If the fuel mesh filter is clogged with sediment or rust, fuel will not flow smoothly and loss in engine power may result.
- Blow the fuel mesh filter with compressed air.

NOTE:
If the fuel mesh filter is clogged with many sediment or rust, replace the fuel filter cartridge with a new one.

FUEL LEVEL GAUGE INSPECTION

Measure resistance between the terminals when the float is at the position instead below.

TOOL 09900-25008: Multi-circuit tester set

Fuel float position	Resistance between terminals
F:98.4 mm (3.87 in) from tank mating face	Approx. 4 – 10 Ω
1/2:176.1 mm (6.93 in) from tank mating face	Approx. 40 – 50 Ω
E:244.7 mm (9.63 in) from tank mating face	Approx. 90 – 100 Ω

- If the resistance measured is out of the specification, replace the gauge with a new one.
- Fuel level meter inspection (☞8-28)

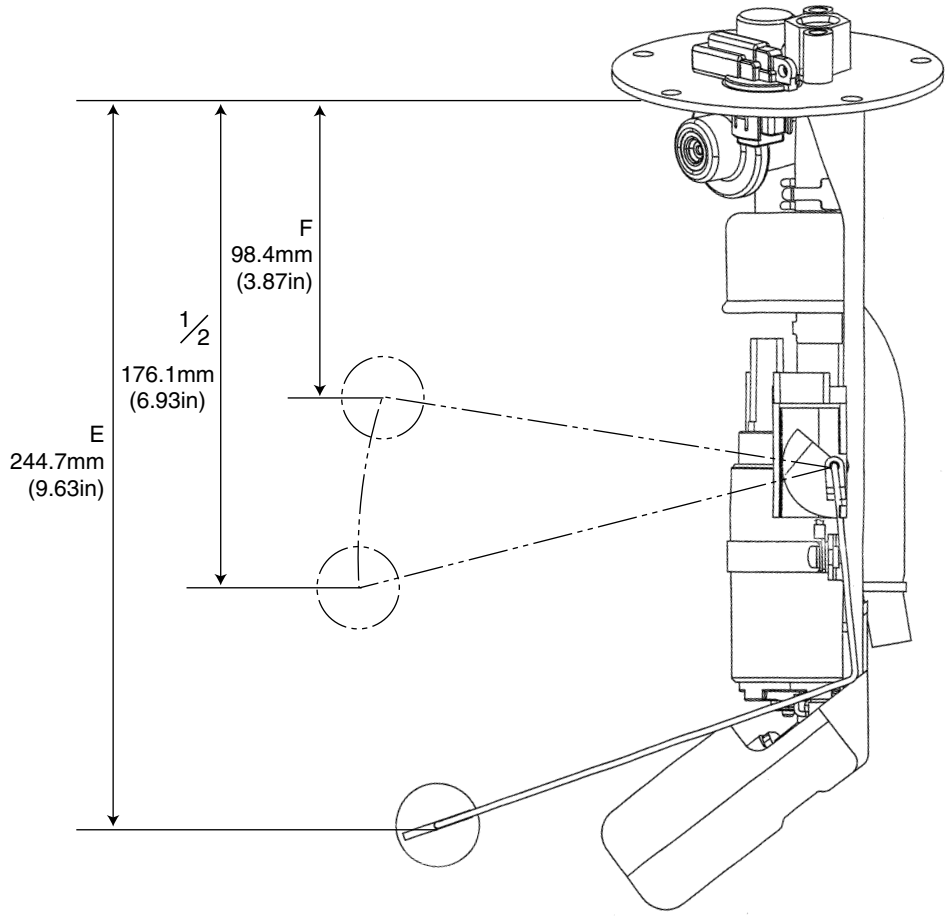

FUEL PUMP AND FUEL LEVEL GAUGE REASSEMBLY

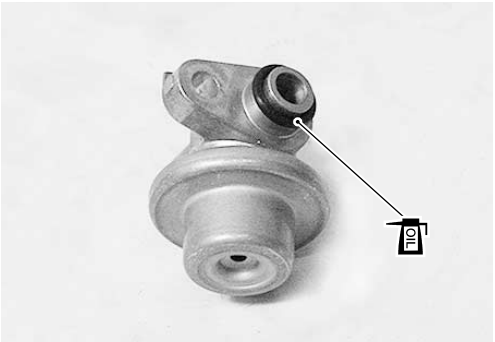

- Reassemble the fuel pump and fuel level gauge reverse order of disassembly.
- Pay attention to the following points:
- Apply thin coat of the engine oil to the O-ring.
- Install the fuel pressure regulator.

CAUTION

Use the new O-ring to prevent fuel leakage.

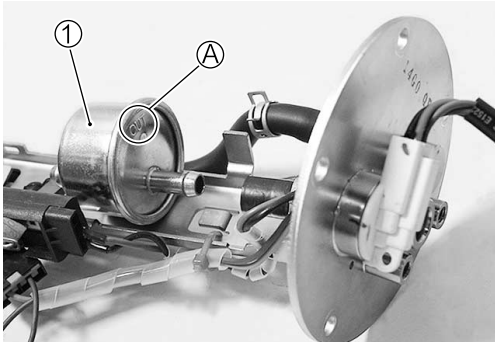

- Install the fuel filter ①.

CAUTION

Install the fuel filter so that "OUT" mark Ⓐ faces the hose side.

- Apply thin coat of the engine oil to the O-ring.
- Install the O-ring ② to the fuel tank.

CAUTION

Replace the O-ring with a new one.

- When installing the fuel pump assembly, first tighten all the fuel pump assembly mounting bolts lightly in the ascending order to numbers, and then tighten them to the specified torque in the above tightening order.

Fuel tank bolt: 4.5 N·m (0.45 kgf-m, 3.3 lb-ft)

THROTTLE BODY

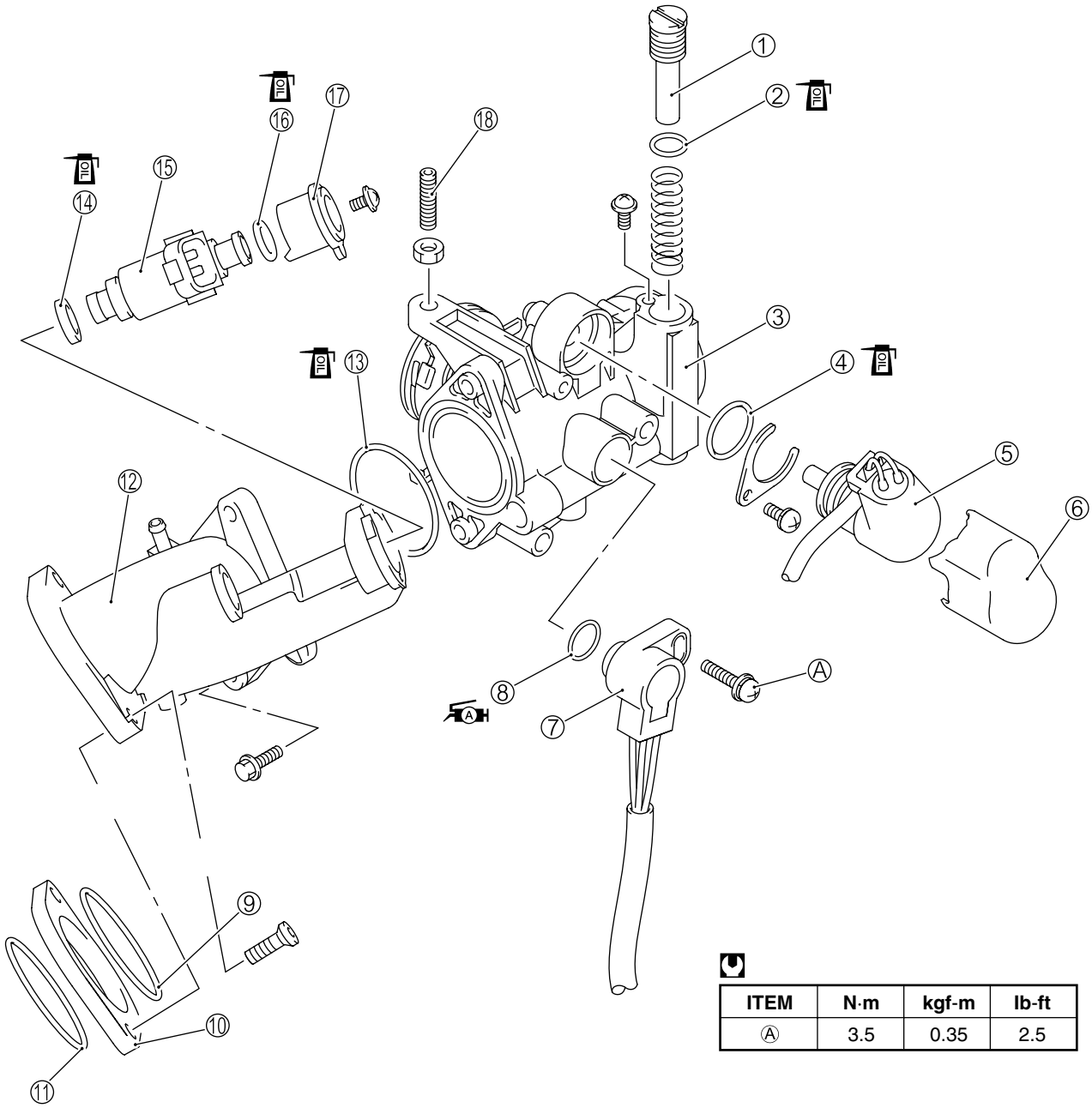

ITEM	N·m	kgf-m	lb-ft
Ⓐ	3.5	0.35	2.5

① Idle adjust screw
② O-ring
③ Throttle body
④ O-ring
⑤ IAC valve
⑥ IAC valve cap
⑦ TP sensor
⑧ O-ring
⑨ O-ring
⑩ Insulator
⑪ O-ring
⑫ Intake pipe
⑬ O-ring
⑭ Fuel injector seal
⑮ Fuel injector
⑯ O-ring
⑰ Insulator
⑱ Throttle lever stopper screw

Ⓐ TP sensor mounting screw

REMOVAL

- Remove the trunk box. (☞7-18)
- Remove the IAP sensor ① from the air cleaner box ②.

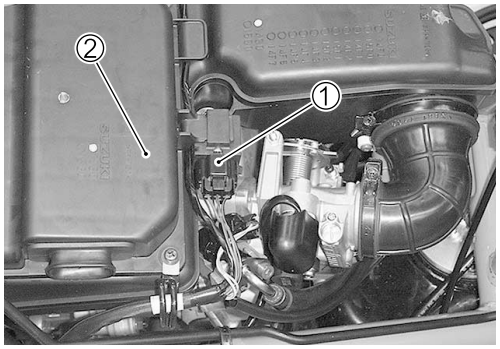

- Loosen the clamp screw.
- Disconnect the IAT sensor coupler ③.
- Disconnect the PAIR control solenoid valve hoses ④.

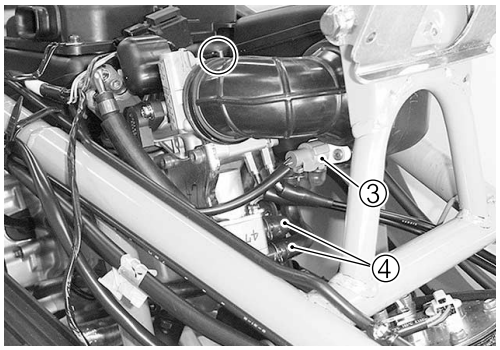

- Disconnect the ECT sensor/ignition coil coupler ⑤.
- Disconnect the PCV hose ⑥.
- Remove the air cleaner box ⑦.

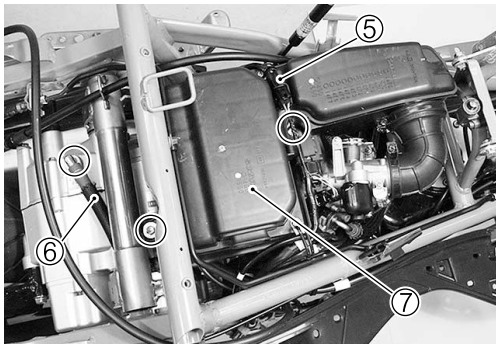

- Disconnect the fuel injector coupler ⑧.
- Disconnect the IAP sensor coupler ⑨.

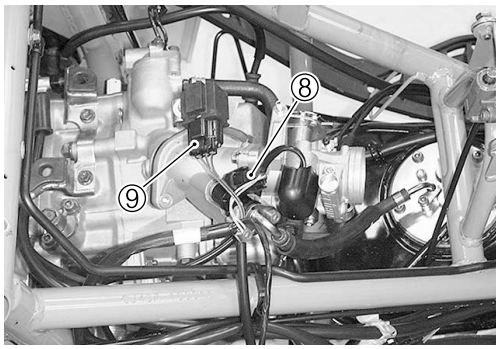

- Disconnect the IAC valve coupler ⑩.
- Disconnect the TP sensor coupler ⑪.
- Disconnect the PAIR control solenoid valve coupler ⑫.

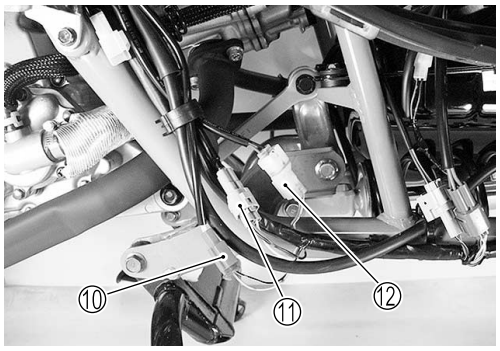

- Remove the PAIR control solenoid valve coupler ①.

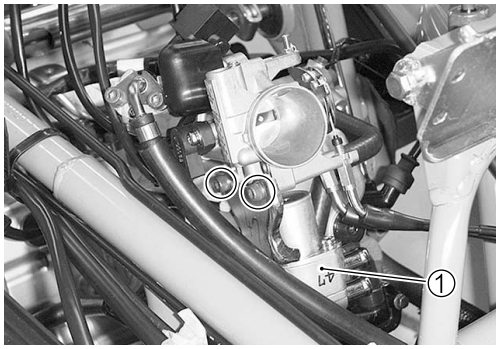

- Disconnect the throttle cables ②.

CAUTION

After disconnecting the throttle cables, do not snap the throttle valve from full open to full close. It may cause damage to the throttle valve and throttle body.

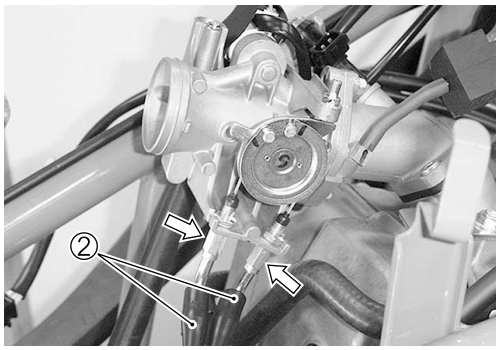

- Disconnect the fuel feed hose ③.

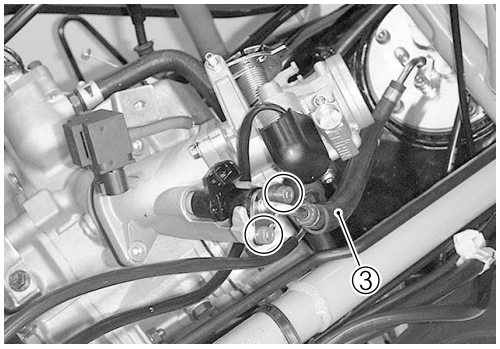

- Remove the throttle body assembly ④, insulator ⑤ and two O-rings.

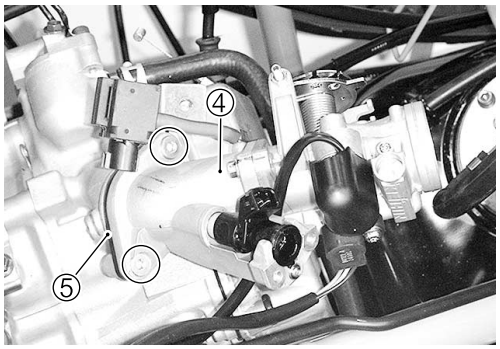

DISASSEMBLY

- Remove the IAC valve cap ①.
- Remove the IAC valve ②.

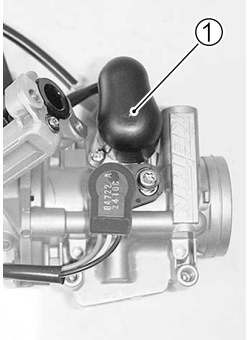

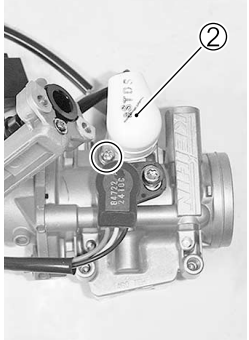

- Remove the TP sensor ③.

NOTE:
Prior to disassembly, mark sensor's original position Ⓐ with a paint or scribe for accurate reinstallation.

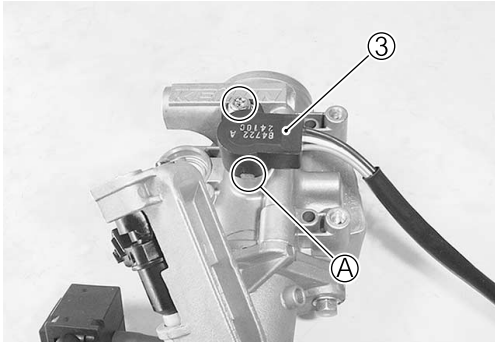

- Remove the IAP sensor ④.
- Disconnect the vacuum hose ⑤.

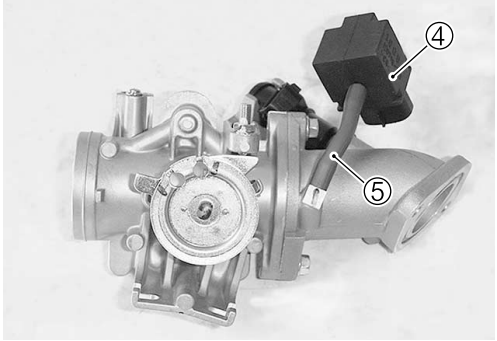

- Remove the insulator ⑥.

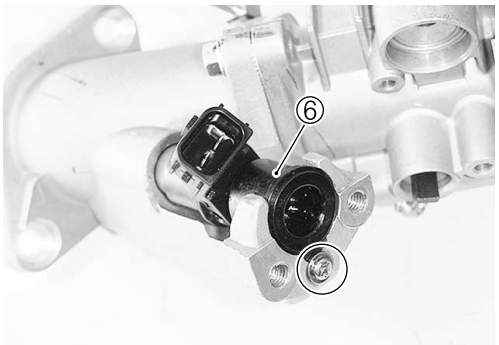

- Remove the fuel injector ⑦.

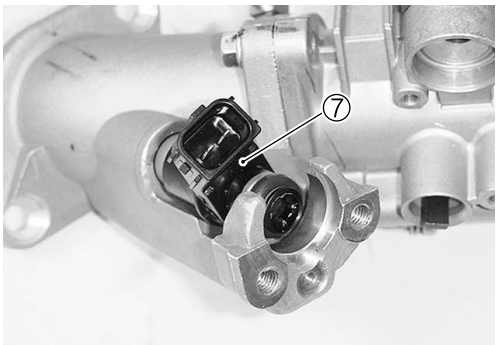

- Remove the intake pipe ① and O-ring from the throttle body ②.

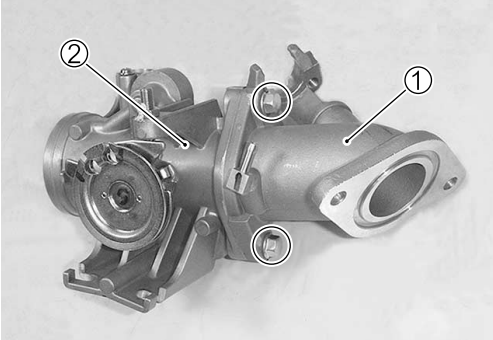

- Remove the idle adjust screw ③.

NOTE:
Before removing the idle adjust screw, determine the setting by slowly turning it clockwise and count the number of turns required to lightly seat the screw. This counted number is important when reassembling idle adjust screw to original position.

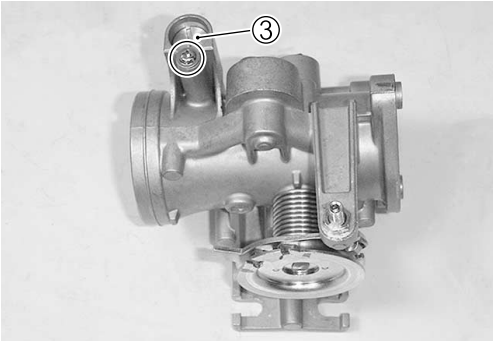

CAUTION

Never remove the throttle valve ④.

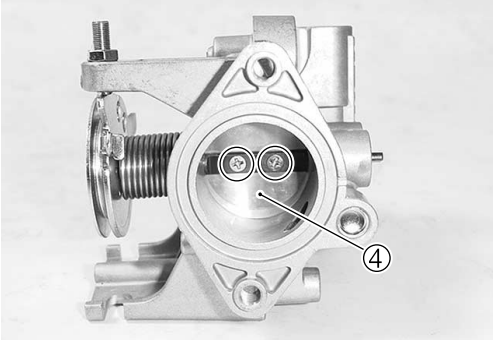

CAUTION

Avoid removing the throttle lever stopper screw Ⓐ.

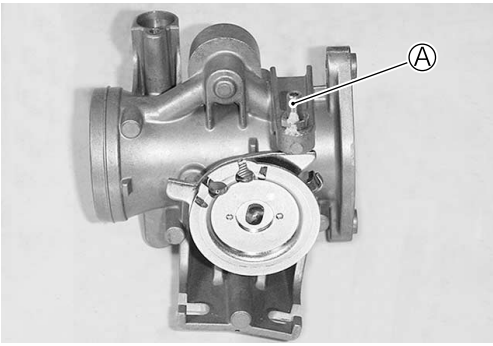

CLEANING AND INSPECTION

- Clean all passageways with a spray-type carburetor cleaner and blow dry with compressed air.

⚠ WARNING

Some carburetor cleaning chemicals, especially dip-type soaking solutions, are very corrosive and must be handled carefully. Always follow the chemical manufacture's instructions on proper use, handling and storage.

- Check following items any damage or clogging.

* Throttle shaft bushing and seal
* Throttle valve
* Idle adjust screw
* Vacuum hose
* Injector seal
* Fuel injector
* O-ring
* Throttle body
* Intake pipe

CAUTION

Do not use wire to clean passageways. Wire can damage passageways. If the components cannot be cleaned with a spray cleaner it may be necessary to use a dip-type cleaning solution and allow them to soak. Always follow the chemical manufacturer's instructions for proper use and cleaning of the throttle body components. Do not apply carburetor cleaning chemicals to the rubber and plastic materials.

IAC VALVE INSPECTION

- The IAC valve can be checked without removing if from the throttle body.
- Inspect the IAC valve. (☞4-39)

REASSEMBLY

- Reassemble the throttle body in the reverse order of disassembly.
- Pay attention to the following points:
- Set the idle adjust screw ① to the original position (amount of turning back) where it was set before disassembly.

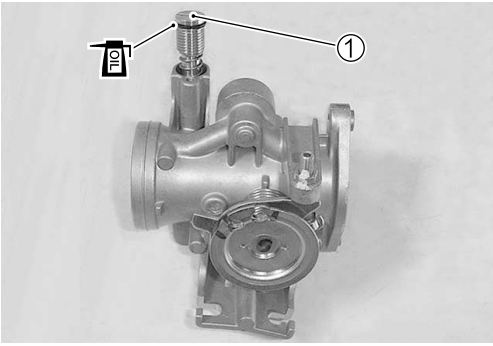

CAUTION

Replace the O-ring with a new one.

- Apply thin coat of the engine oil to the new O-ring.
- Install the O-ring ② to the throttle body.

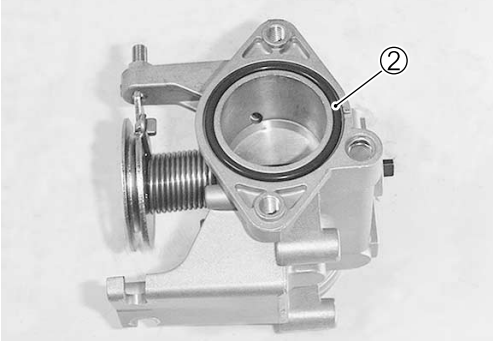

CAUTION

Replace the O-ring with a new one.

- Install the injector seal ③ and O-ring ④ to fuel injector.
- Apply thin coat of the engine oil to the new O-ring and new seal.
- Install the fuel injectors by pushing them straight to throttle body.

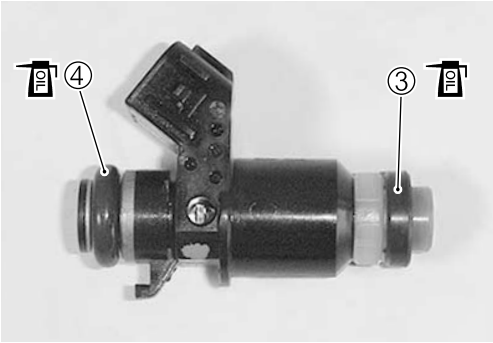

CAUTION

Replace the injector seal and O-ring with the new ones. Never turn the injector while pushing it.

- Apply a small quantity of SUZUKI SUPER GREASE to the shaft end and seal lip.

99000-25010: SUZUKI SUPER GREASE "A" (Others)
99000-25030: SUZUKI SUPER GREASE "A" (USA)

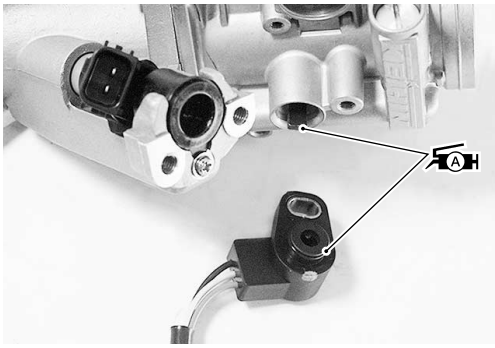

- With the throttle valve fully closed, install the TP sensor to the original setting position.

TP sensor mounting screw: 3.5 N·m (0.35 kgf-m, 2.5 lb-ft)

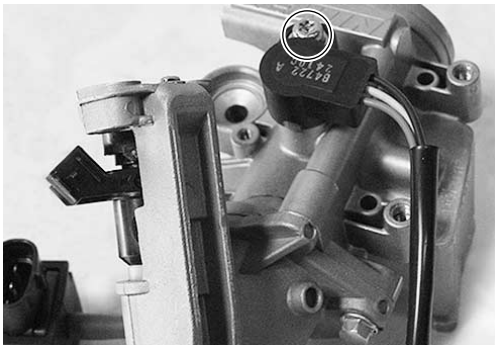

- Install the IAC valve.

CAUTION

Replace the O-ring with a new one.

- Apply thin coat of the engine oil to the new O-ring.

INSTALLATION

- Installation is in the reverse order of removal. Pay attention to the following points:
- With THREAD LOCK applied to the mounting bolts, install the PAIR control solenoid valve.

1342 99000-32050: THREAD LOCK "1342"

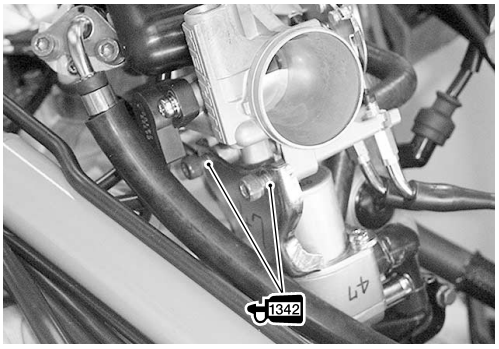

- Insert the protrusions Ⓐ of air cleaner box into the holes Ⓑ of its bracket.

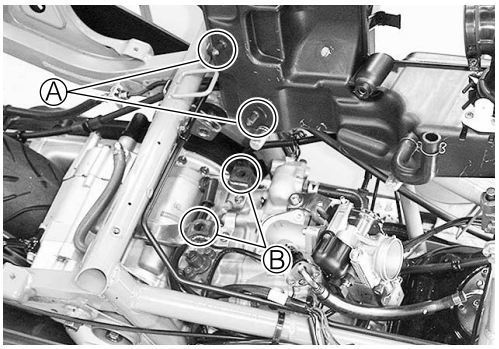

THROTTLE CABLE ADJUSTMENT

- Adjustment can be made by the throttle grip side adjuster. (☞2-12)

TP SENSOR ADJUSTMENT

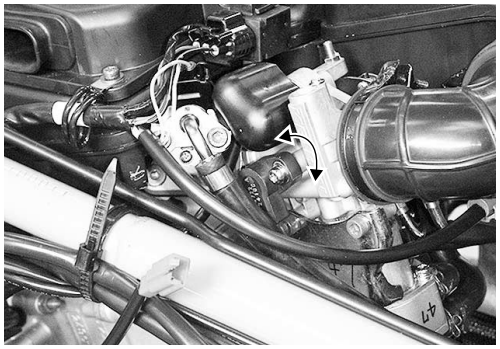

- After installing the throttle body, adjust the TP sensor positioning as follows:
- After warming up engine, adjust the idling speed to 1 500 ±100 rpm.
- Stop the warmed-up engine and connect the special tool to the dealer mode coupler. (☞4-20)

TOOL 09930-82710: Mode select switch

- Turn the special tool's switch ON.

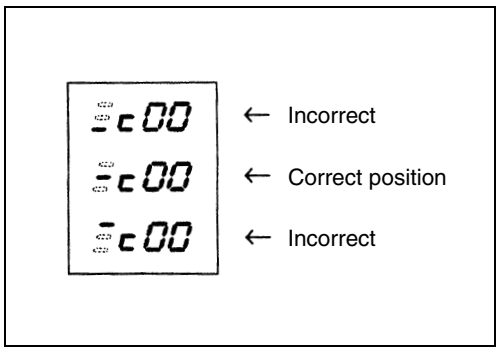

- If the TP sensor adjustment is necessary, loosen the TP sensor mounting screw.
- Turn the TP sensor and bring the line to middle.
- Tighten the TP sensor mounting screw.

TP sensor mounting screw: 3.5 N·m (0.35 kgf-m, 2.5 lb-ft)

FUEL INJECTOR REMOVAL

- Remove the front frame cover. (☞7-17)
- Disconnect the injector coupler.
- Remove the fuel feed hose. (☞5-15)
- Remove the fuel injector. (☞5-16)

FUEL INJECTOR INSPECTION

- The fuel injector can be checked without removing it from the throttle body. (☞4-37)

FUEL INJECTOR INSTALLATION

- Install the fuel injector. (☞5-19)

COOLING AND LUBRICATION SYSTEM

CONTENTS

COOLING SYSTEM

DESCRIPTION

The engine is cooled by the forced circulation of engine coolant, using a high-capacity, centrifugal water pump, through water jackets formed in the cylinder and cylinder head, and through the radiator. The tube-and-fin type radiator is made of aluminum, which is characterized by lightness in weight and good heat dissipation.

A wax-pellet type thermostat is used to regulate the flow of engine coolant through the radiator. As the coolant temperature rises to about 82 °C (180 °F) the thermostat valve unseats and a normal coolant flow is established. At about 95 °C (203 °F) the thermostat becomes completely open and, as a result, heat is released to the atmosphere through the radiator core.

COOLING CIRCUIT

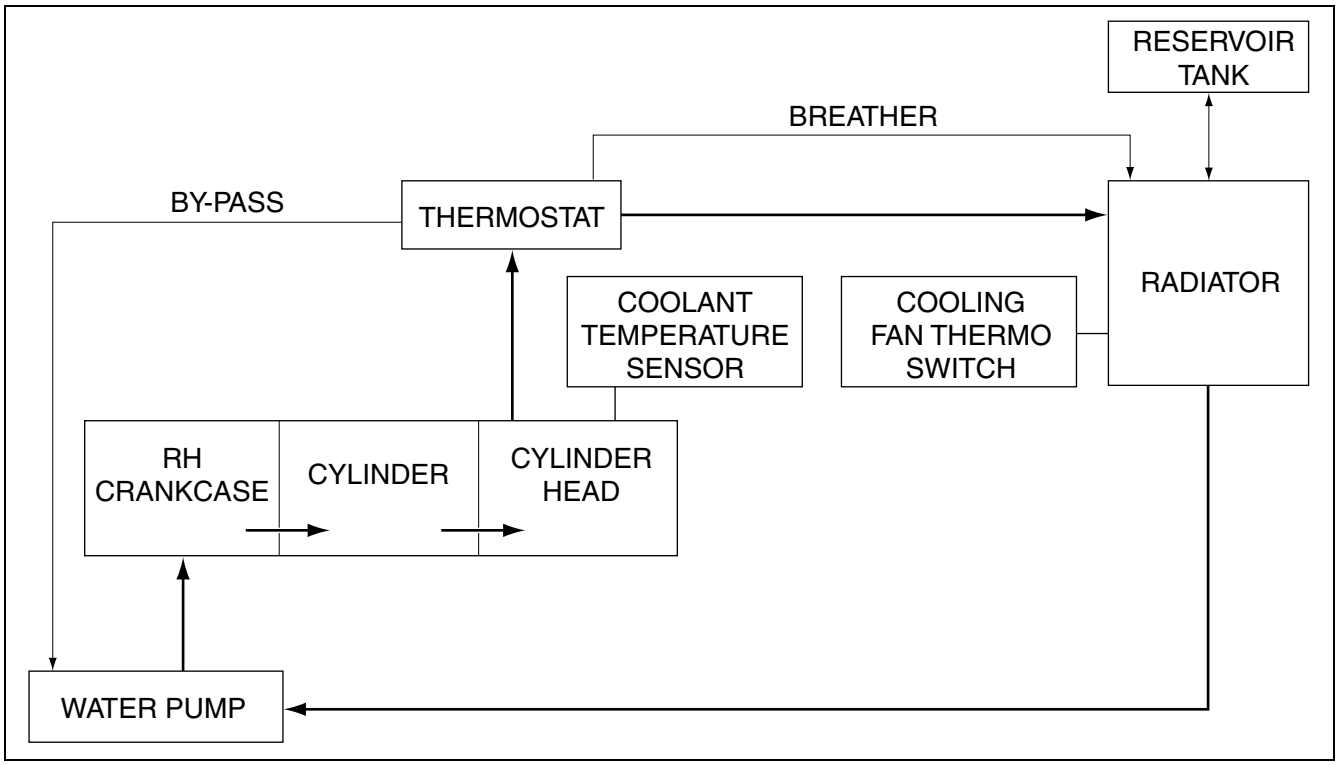

ENGINE COOLANT

At the time of manufacture, the cooling system is filled with a 50:50 of pure water and coolant. This 50:50 mixture will provide excellent heat protection, and will protect cooling system from freezing at temperature above –30 °C (–22 °F).
If the motorcycle is to be exposed to temperature below –30 °C (–22 °F), this mixture ratio should be increased up to 55 % or 60 %.

⚠ WARNING

- **Coolant used should be of a high quality ethyleneglycol base mixed with distilled water.**
- **Do not use an alcohol base coolant.**
- **The mixture ratio should not be higher than 60% and lower than 50%.**
- **Do not use sealing additives in cooling solution.**

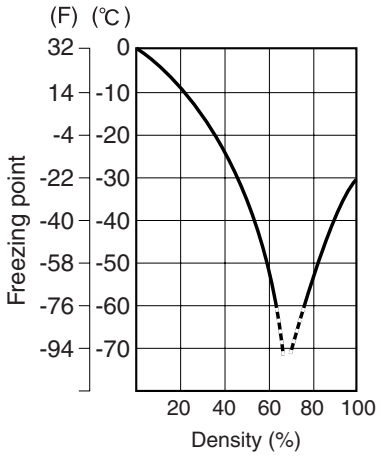

FIG.1 Engine coolant density-freezing point curve.

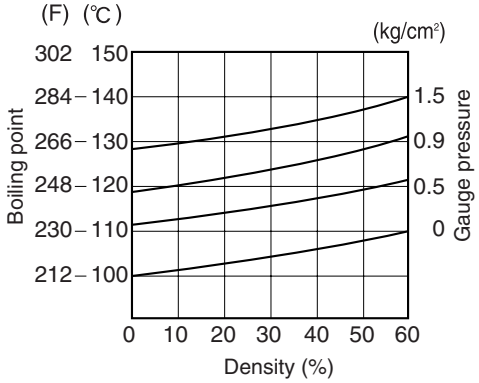

FIG.2 Engine coolant density-boiling point curve.

DRAINING ENGINE COOLANT

- Remove the side leg shield. (☞7-15)
- Place under the water hose a container large enough for receiving coolant.
- Remove the radiator cap.

⚠ WARNING

Do not remove the radiator cap when the radiator is hot.

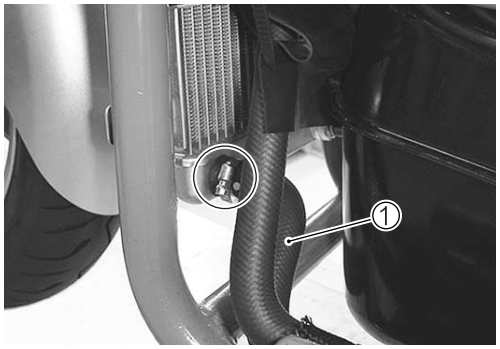

- Disconnect the radiator hose ① to let coolant drain off.
- Remove the hose ② and drain coolant remaining inside the engine.

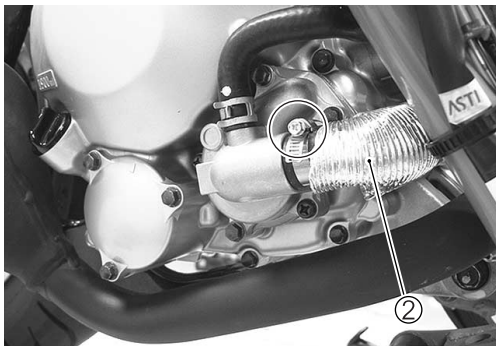

REMOVAL AND DISASSEMBLY

RADIATOR

- Remove the front box. (☞7-14)
- Drain the engine coolant. (☞6-3)
- Disconnect the radiator inlet hose ① and radiator cap hose ②.

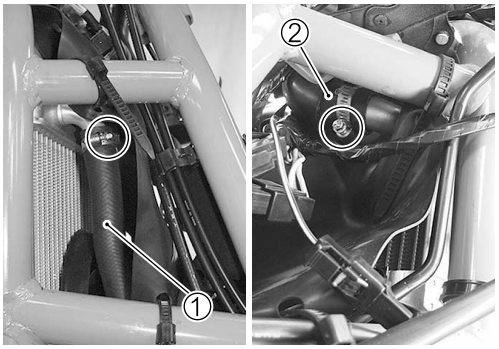

- Disconnect the cooling fan coupler ③.

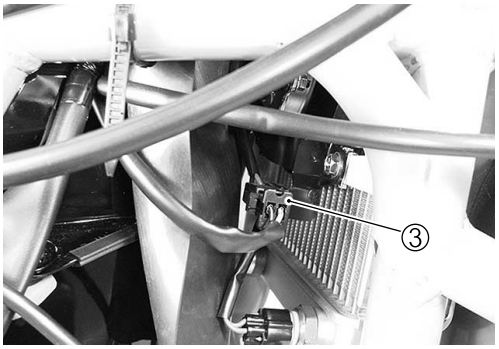

- Remove the radiator ④.

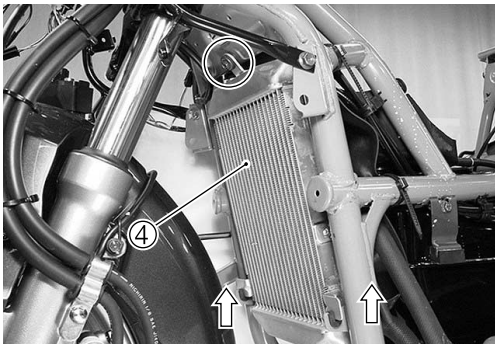

- Disconnect the cooling fan thermo-switch coupler ⑤.
- Remove the cooling fan ⑥.

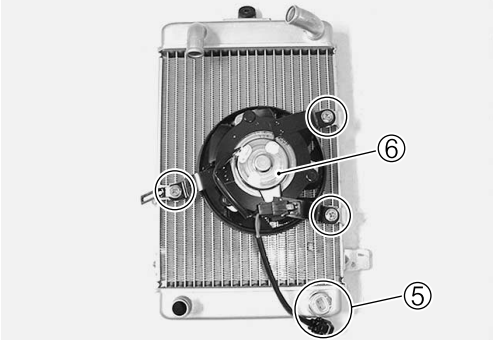

INSPECTION

RADIATOR

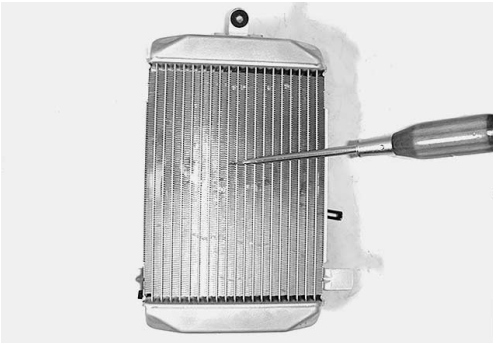

- Check the radiator for dirt or small bug stuck between the fins.
- Use compressed air for cleaning. If dirt is excessive, wash with water.
- Fins bent or dented can be straightened using a small plane screwdriver.

WATER HOSE

- If a crack or deformation is found with the water hose, replace it with a new one. Check for leaks from the joint and if found, retighten the clamp.

COOLING FAN

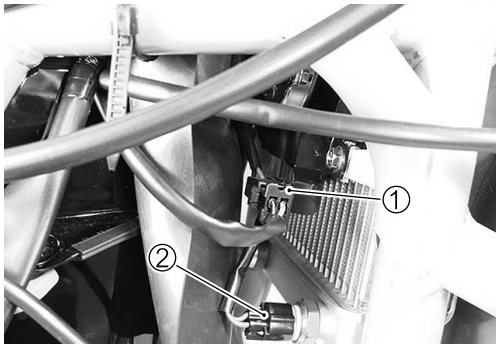

- Remove the front box. (☞7-14)
- Disconnect the cooling fan coupler ①.
- Disconnect the cooling fan thermo-switch coupler ② and short-circuit it with a jumper wire.

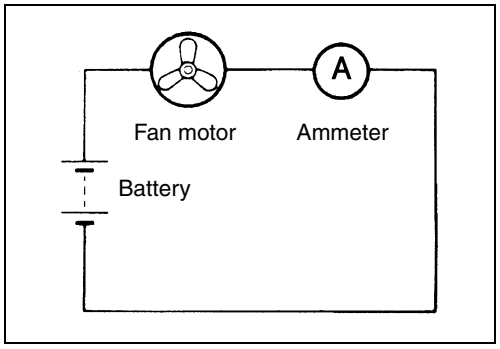

- Connect an ammeter as shown in the right diagram and measure load current.

NOTE:
Removing the cooling fan from the motorcycle is not necessary in the above test.

TOOL 09900-25008: Multi-circuit tester set

DATA Load current: 5 A maximum

- If current is out of specification or the fan does not turn, replace the fan with a new one.

REASSEMBLY AND REMOUNTING

- Reassemble and remount the radiator and cooling fan in the reverse order of removal and disassembly.
- Pay attention to the following points:
- Tighten the cooling fan mounting bolts to the specified torque.

Cooling fan mounting bolt: 10 N·m (1.0 kgf-m, 7.0 lb-ft)

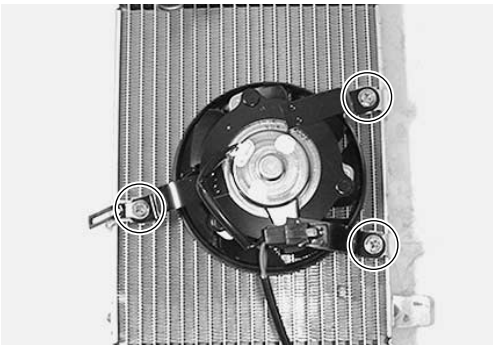

- Tighten the radiator mounting bolt to the specified torque.

Radiator mounting bolt: 10 N·m (1.0 kgf-m, 7.0 lb-ft)

- Install the hoses. (☞9-25)
- After the radiator has been installed, fill coolant and perform air bleeding. (☞2-15)
- Check for leakage of the engine coolant.

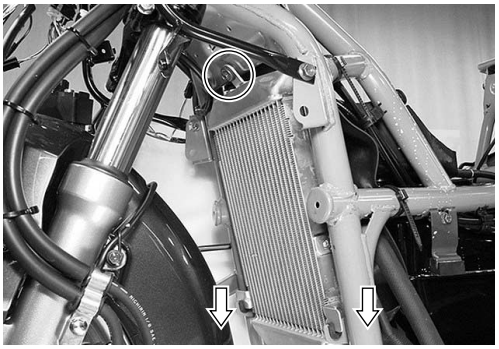

COOLING FAN THERMO-SWITCH

The cooling fan is secured behind the radiator by three bolts and is automatically controlled by the thermo-switch. The thermo-switch remains open when the temperature of the engine coolant is low, but closes when the temperature reaches approximately 93 °C(199 °F)setting the cooling fan in motion.

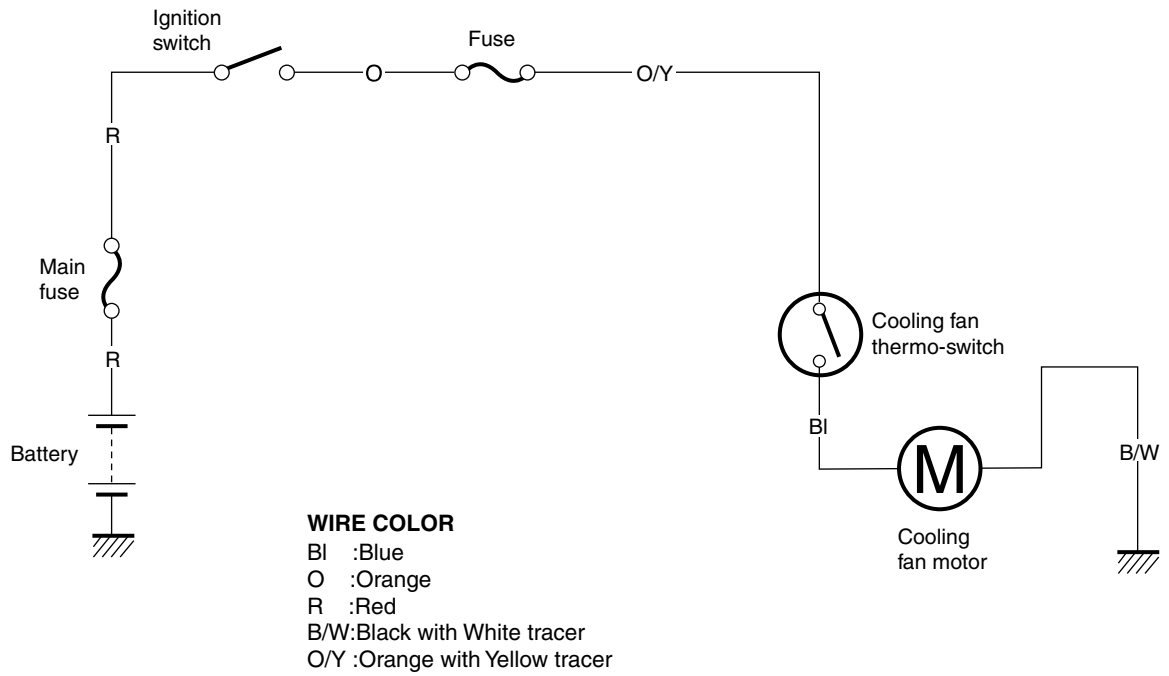

REMOVAL

- Remove the front box. (☞7-14)
- Disconnect the cooling fan thermo-switch coupler ①.
- Remove the cooling fan thermo-switch ②.

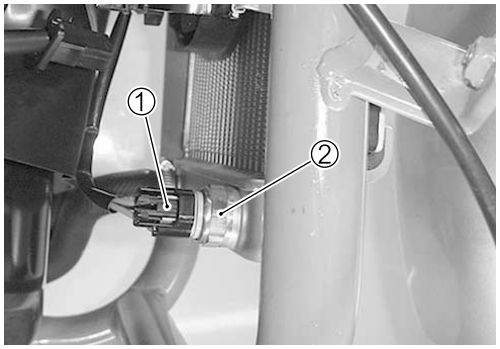

INSPECTION

- Place the cooling fan thermo-switch in oil contained in a pan as shown and raise the oil temperature gradually to check for the temperature at which the switch starts to operate.
- If the switch operating temperature is not within the specified range, replace the switch with a new one.

TOOL 09900-25008: Multi-circuit tester set

DATA Cooling fan thermo-switch operating temperature:
Standard: OFF→ON: 93 –103 °C (199 – 217 °F)
ON→OFF: 87 – 97 °C (189 – 207 °F)

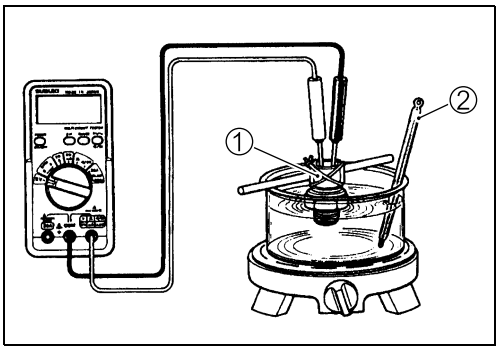

CAUTION

- **Handle the cooling fan thermo-switch carefully as it is vulnerable to impact.**
- **Do not allow the cooling fan switch ① and the thermometer ② to come in contact with the bottom of the pan.**

INISTALLATION

- Install the O-ring ①.
- Tighten the cooling fan thermo-switch to the specified torque.

Cooling fan thermo-switch: 18 N·m (1.8 kgf-m, 13.0 lb-ft)

CAUTION

- **Replace the O-ring with a new one.**
- **Do not coat grease to the O-ring.**

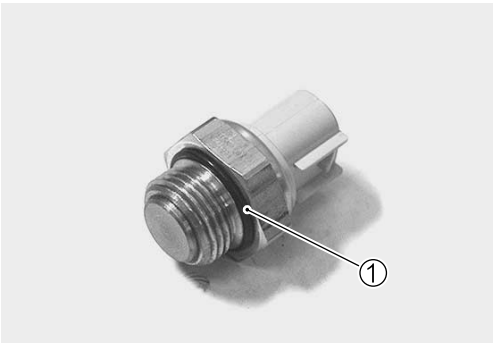

- After the cooling fan thermo-switch has been installed, fill coolant and perform air bleeding. (☞2-15)

ENGINE COOLANT TEMPERATURE SENSOR

REMOVAL

- Remove the frame cover. (☞7-18)
- Disconnect the connector ①.
- Remove the engine coolant temperature sensor ②.

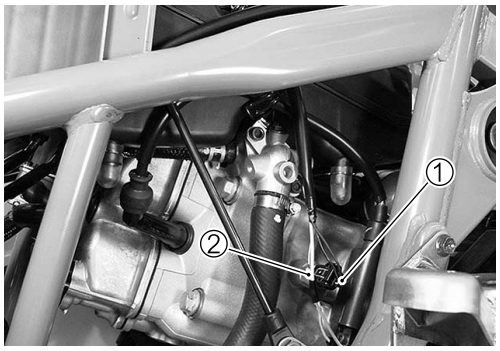

INSPECTION

- Check the engine coolant temperature sensor closing or opening temperatures by testing it at the bench as shown in the figure. Connect the engine coolant temperature sensor ① to a circuit tester and place it in the water contained in a pen, which is placed on a stove.
- Heat the water to raise its temperature slowly and read the column thermometer ② when the switch closes or opens.

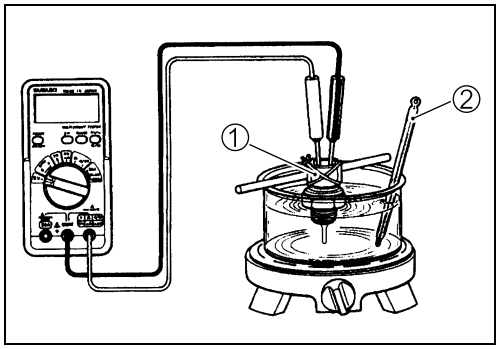

TOOL 09900-25008: Multi circuit tester set

DATA Cooling fan thermo-switch operating temperature

Standard: 20 °C (68 °F). Approx. 2.58 kΩ
40 °C (104 °F).Approx. 1.14 kΩ
80 °C (176 °F).Approx. 0.28 kΩ
100 °C (212 °F).Approx. 0.16 kΩ

CAUTION

*** Take special care when handling the engine coolant temperature sensor. Do not subject it to strong blows or allow it to be dropped.**
*** Do not contact the engine coolant temperature sensor ① and the column thermometer ② with a pan.**

INSTALLATION

- Install the O-ring ①.
- Tighten the engine coolant temperature sensor to the specified torque.

Engine coolant temperature sensor: 12 N·m (1.2 kgf-m, 8.5 lb-ft)

CAUTION

Replace the O-ring with a new one.

THERMOSTAT

REMOVAL

- Remove the frame cover. (☞7-18)
- Remove the thermostat case ①.

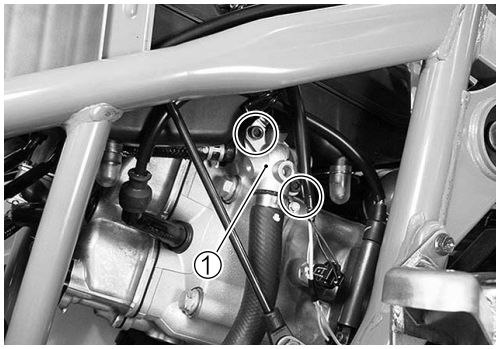

- Remove the thermostat ②.

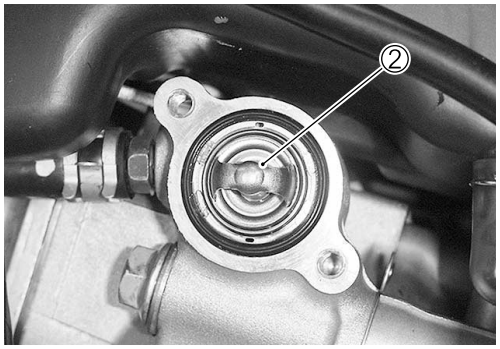

INSPECTION

- Check for crack or break on the thermostat.
- Immerse the thermostat in water contained in a pan as shown and measure the valve start-to-open temperature when water is heated gradually.
- If the thermostat valve opening temperature is not within the specified range, replace the thermostat with a new one.

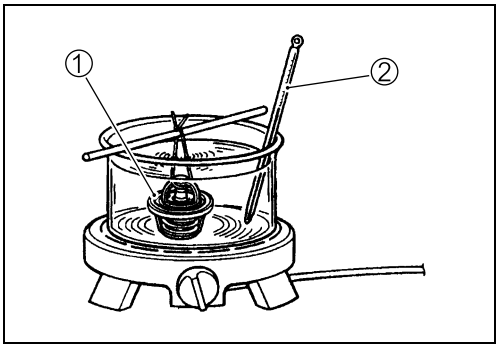

Thermostat valve start-to-open temperature: Approx.82 °C (180 °F)

CAUTION

- **Do not allow the thermostat ① and thermometer ② to come in contact with the bottom of the pan.**
- **As the thermostat operating response to water temperature change is gradual, do not raise water temperature too quickly.**
- **The thermostat with its valve open even slightly under normal temperature must be replaced.**

- Continue to heat water until 95 °C (203 °F) is exceeded and check for the thermostat valve lift when temperature is at 95 °C (203 °F).
- If the valve lift is out of specification or less then the specification, replace the thermostat with a new one.

DATA Thermostat valve lift: 3.0 mm (0.12 in)

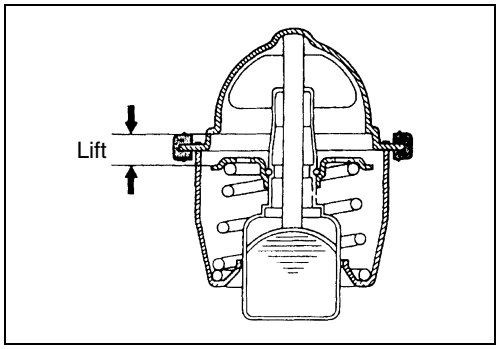

INSTALLTATION

- Position the thermostat with the air bleeder hole Ⓐ upside.

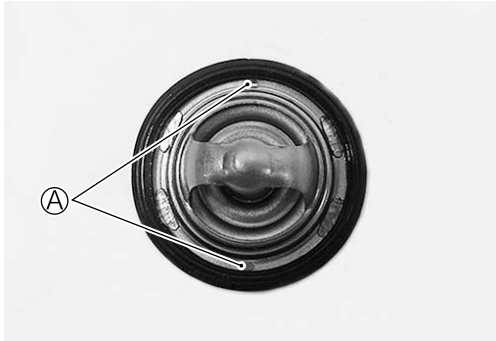

- Install the thermostat case ①.

Thermostat case bolt: 10 N·m (1.0 kgf-m 7.0 lb-ft)

NOTE:
Tighten the bolt together with the clamp ② and secure the high-tension cord with the clamp.

- After the thermostat has been installed, fill coolant and perform air bleeding. (☞2-15)

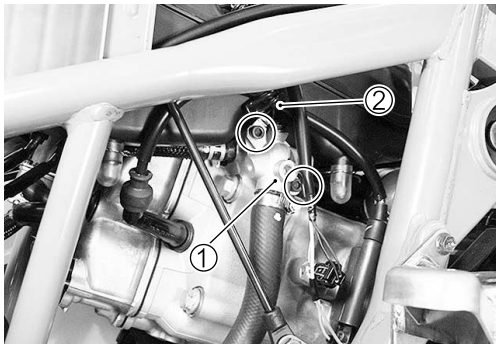

WATER PUMP

REMOVAL AND DISASSEMBLY

- Drain engine coolant. (☞6-3)
- Disconnect the water hose ①.
- Remove the water pump ②.

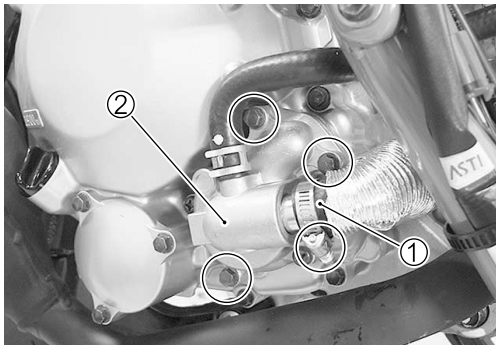

- Remove the water pump cover ③.

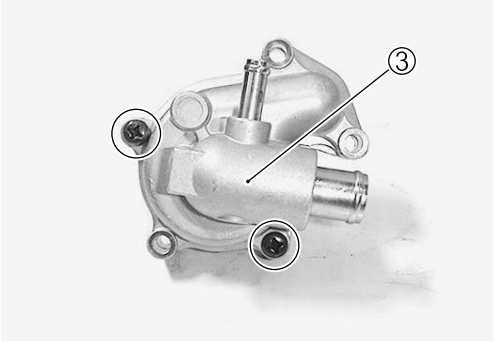

- Remove the E-ring ④.
- Remove the impeller together with the water pump shaft.

- Remove the mechanical seal ⑤ using the special tool.

TOOL 09921-20240: Bearing remover set (ϕ12)

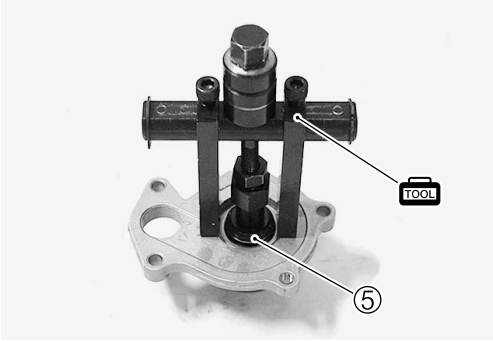

- Remove the oil seal ⑥ using the special tool.

TOOL 09913-50121: Oil seal remover

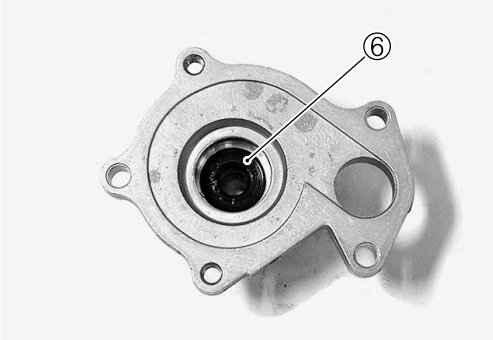

- Remove the bearing ⑦ using the special tool.

TOOL 09921-20240: Bearing remover set (ϕ10)

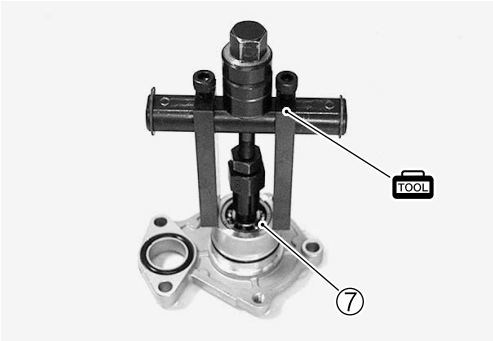

INSPECTION

- Visually check the mechanical seal surface for damage carefully.
- If any sign of leakage is noted, replace the mechanical seal and as necessary together with the oil seal and bearing.

REASSEMBLY AND REMOUNTING

- Install the bearing ①.

TOOL 09925-98221: Bearing installer

- Prior to installing the oil seal, apply SUZUKI SUPER GREASE to the lip.

NOTE:
Press-fit the oil seal ② with the stamped mark side to face the mechanical seal side.

A 99000-25010: SUZUKI SUPER GREASE "A" (Others)
99000-25030: SUZUKI SUPER GREASE "A" (USA)

- To press-fit the mechanical seal into the water pump, use a pipe shape material of an appropriate size.

CAUTION

Replace the mechanical seal with a new one.

NOTE:
The new mechanical seal is applied with a sealing agent at the factory.

- Install the impeller and water pump shaft ③.
- Install the E-ring.

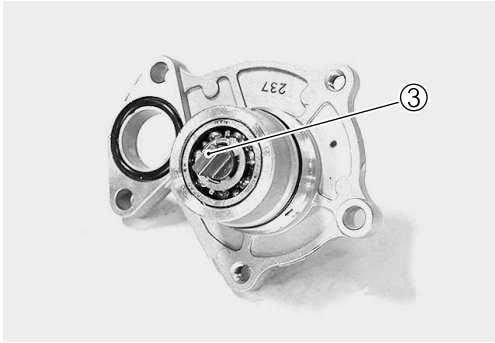

- Install the water pump cover to the water pump with the O-ring ④ fitted and grease coated.

99000-25010: SUZUKI SUPER GREASE "A" (Others)
99000-25030: SUZUKI SUPER GREASE "A" (USA)

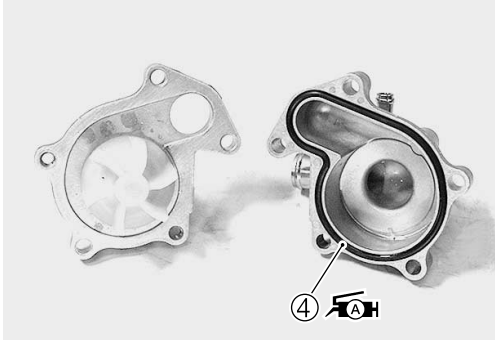

- Apply SUZUKI SUPER GREASE to the O-rings ⑤, ⑥ and install the water pump case on the engine.

99000-25010: SUZUKI SUPER GREASE "A" (Others)
99000-25030: SUZUKI SUPER GREASE "A" (USA)

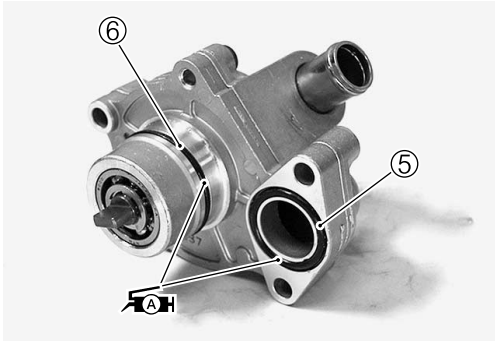

- Install the water pump with the flats on the pump shaft end Ⓐ securely engaged with the slot Ⓑ on the oil pump shaft.

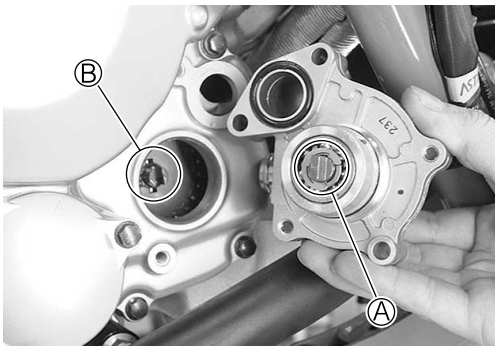

- Tighten the water pump case bolts to the specified torque and install the water hose. (☞9-25)

Water pump case bolt: 10 N·m (1.0 kgf-m, 7.0 lb-ft)

- Pour coolant into the cooling system. (☞2-13)
- Start the engine and check for leakage of coolant and oil.

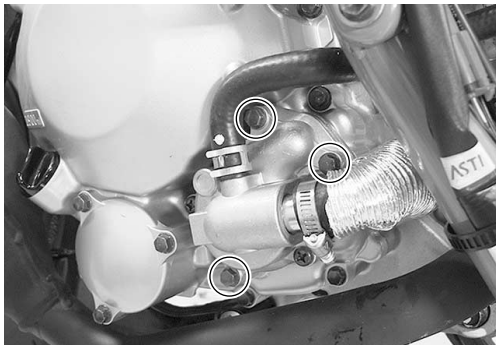

LUBRICATION SYSTEM

OIL PRESSURE

☞2-26

OIL FILTER

☞2-9

OIL SUMP FILTER

☞3-18, 70

OIL PUMP

☞3-19, 69

ENGINE LUBRICATION SYSTEM CHART

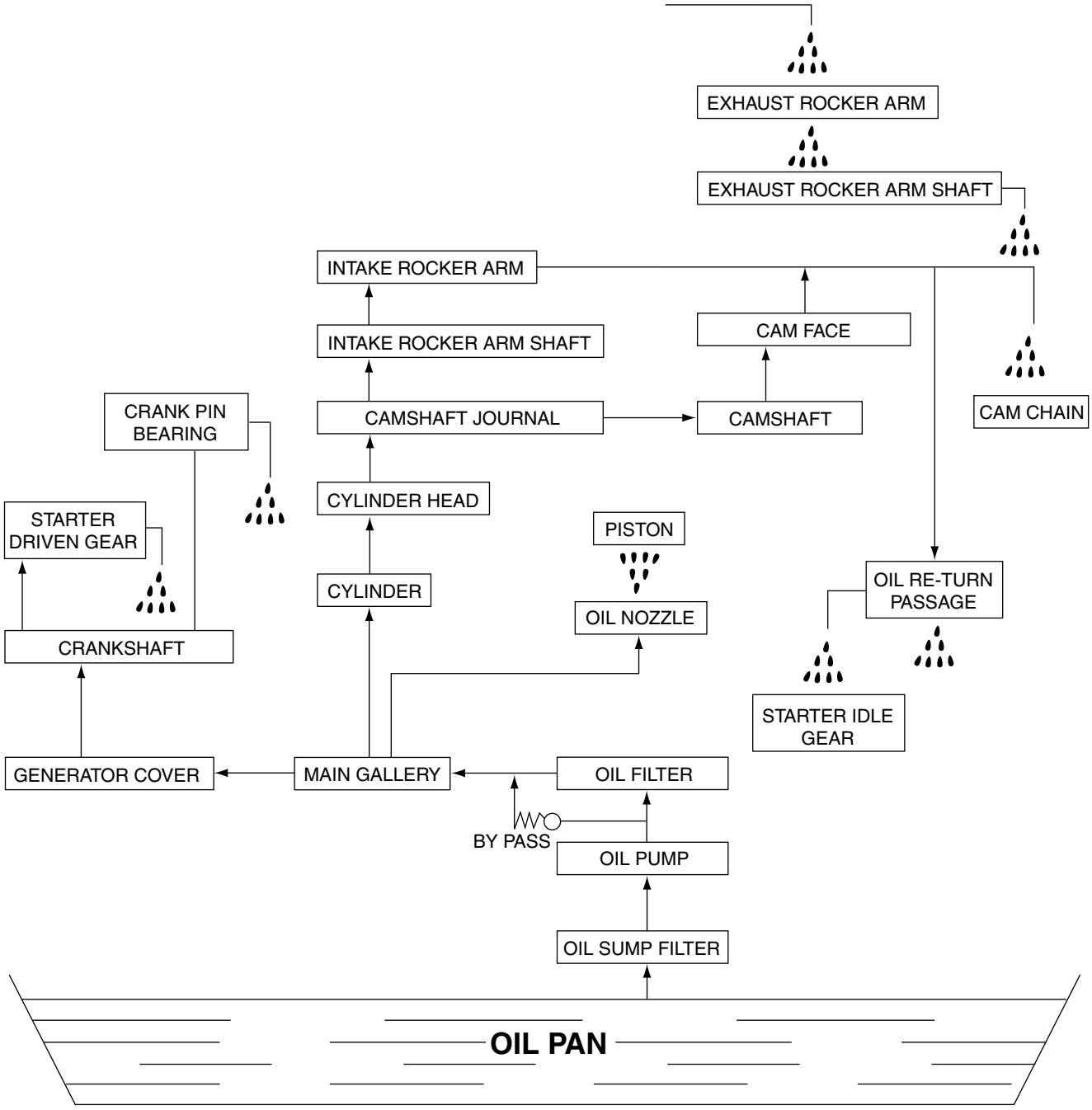

ENGINE LUBRICATION SYSTEM

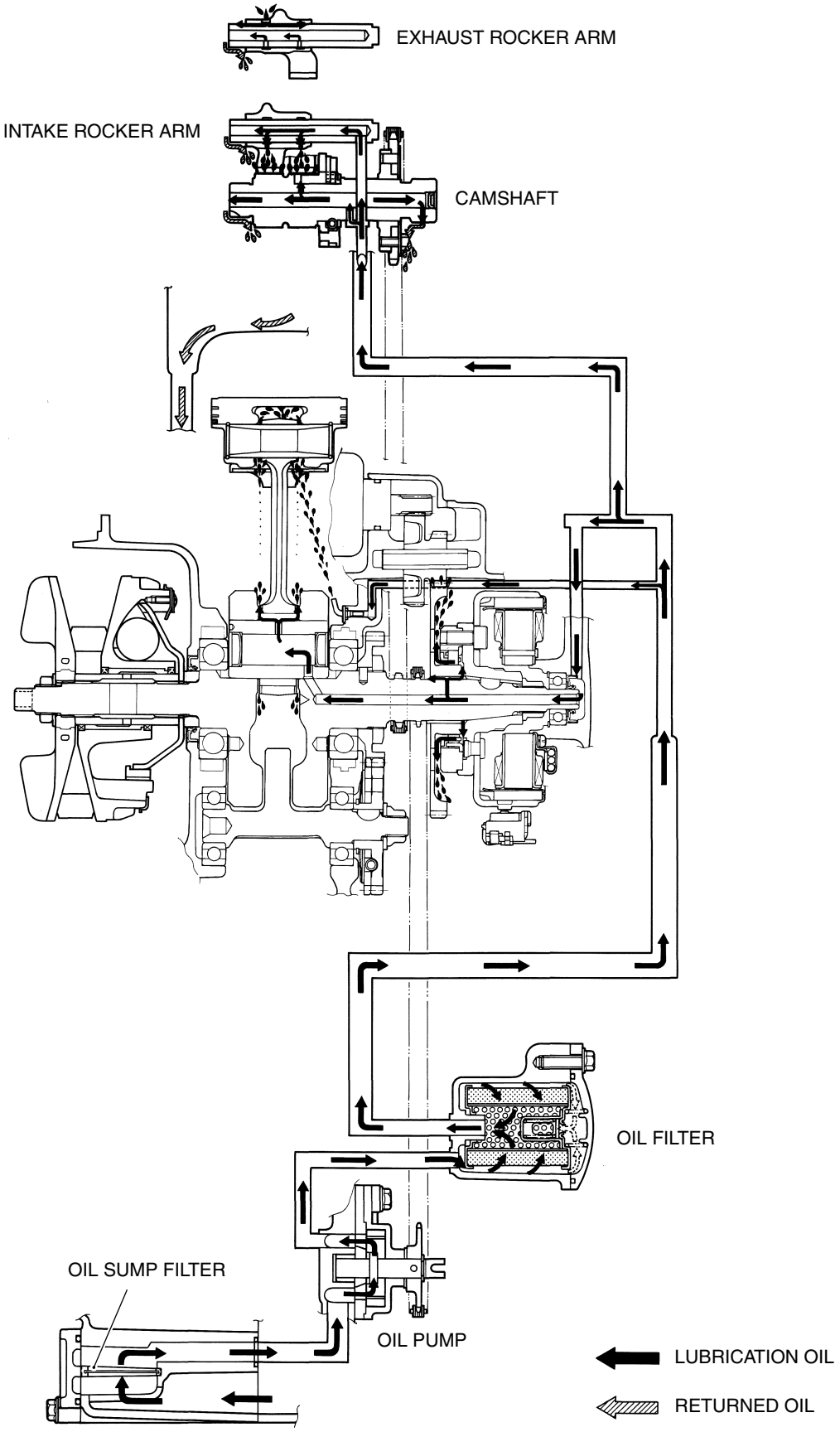

CHASSIS

CONTENTS

CHASSIS

CONTENTS

EXTERIOR PARTS
CONSTRUCTION

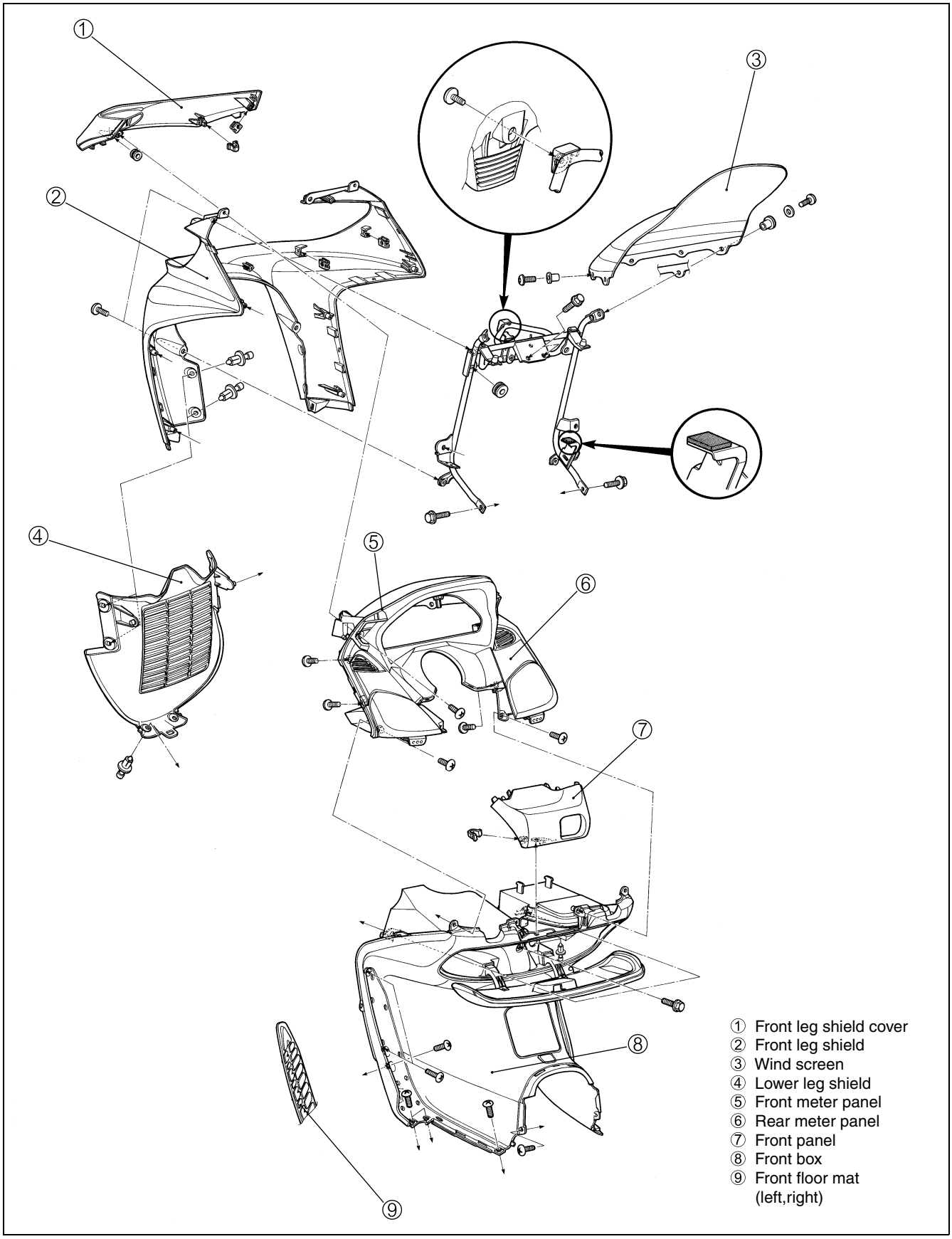

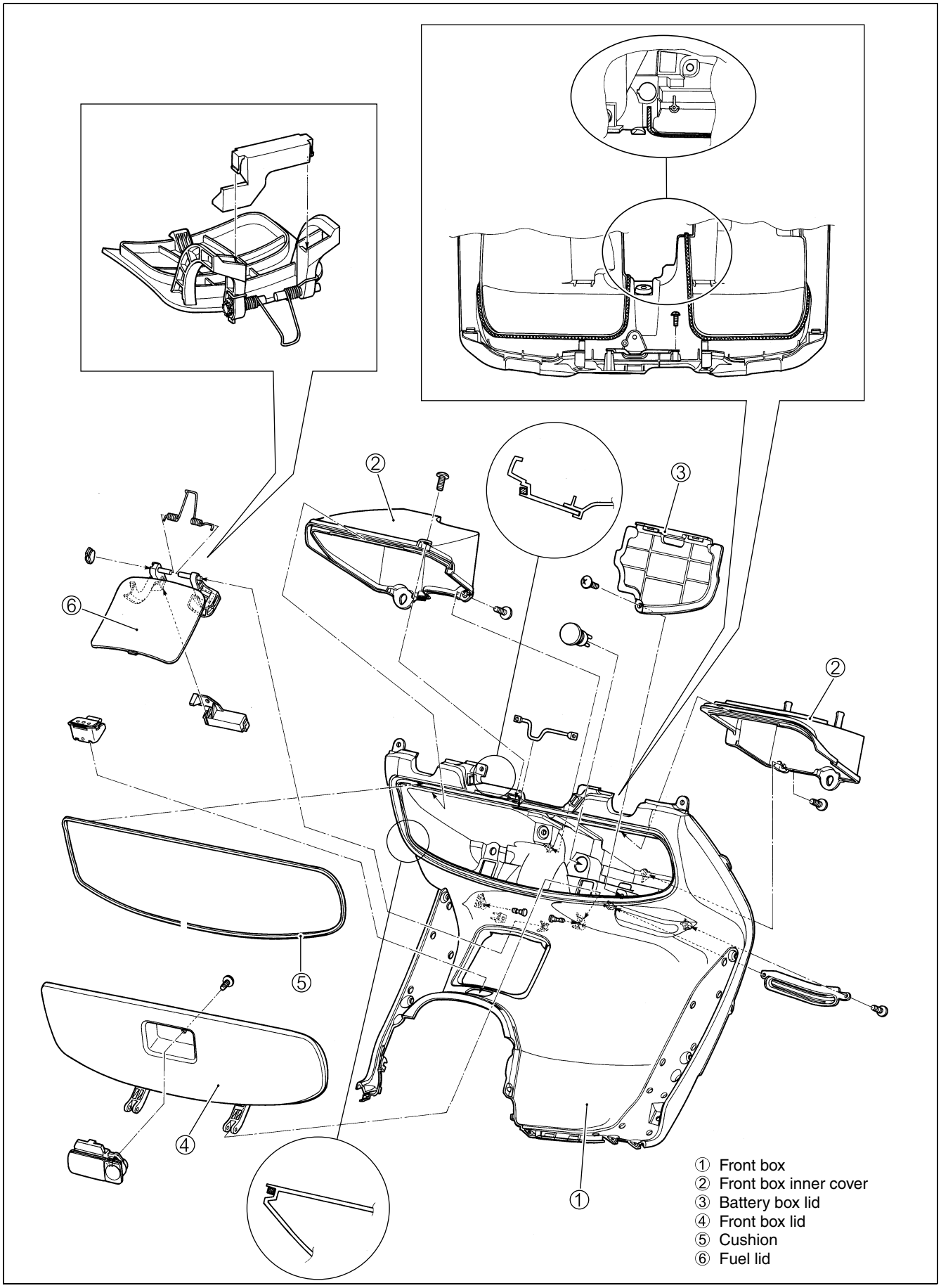
①
②
③
④
⑤
⑥
① Front box
② Front box inner cover
③ Battery box lid
④ Front box lid
⑤ Cushion
⑥ Fuel lid

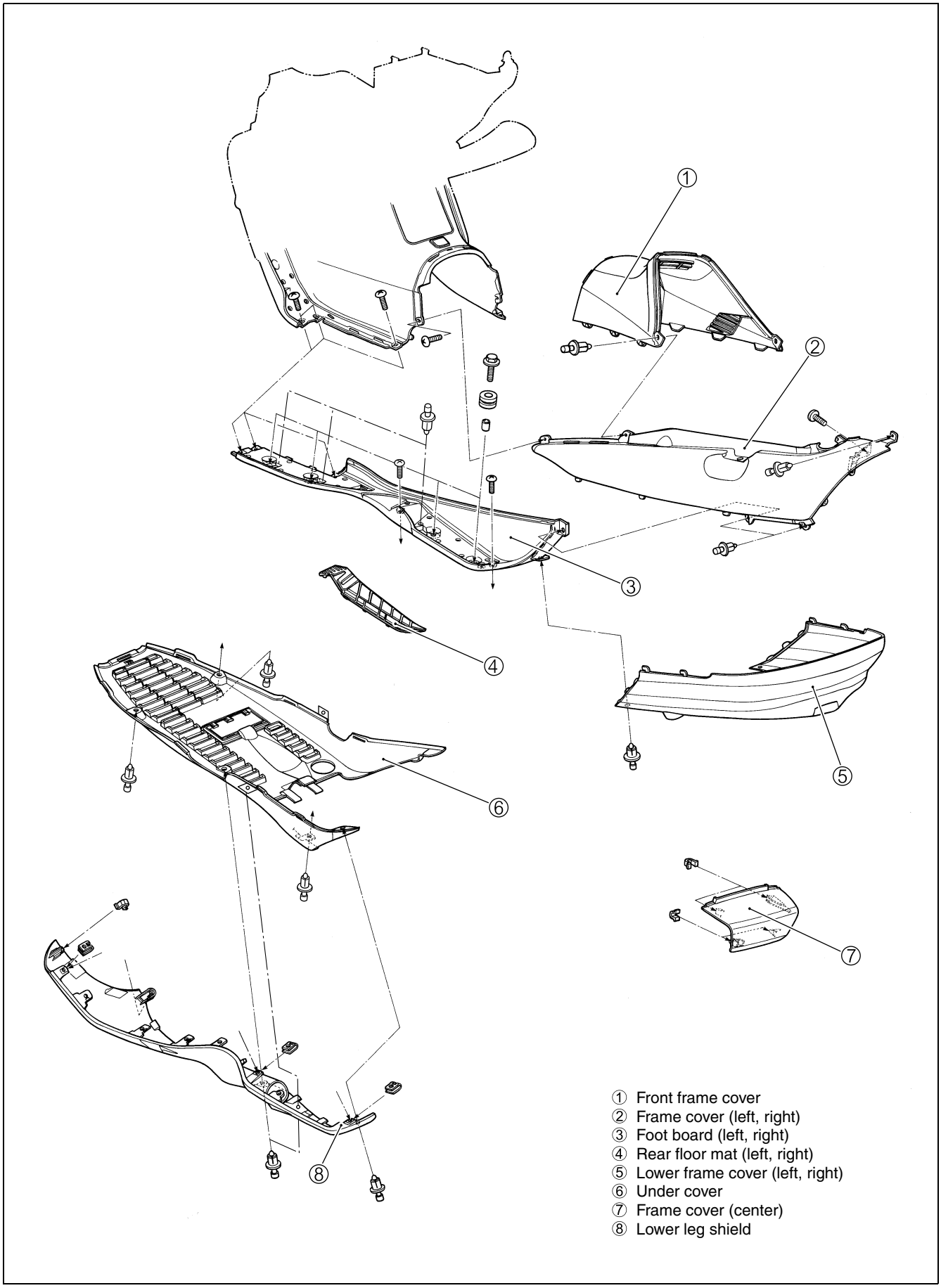
①
②
③
④
⑤
⑥
⑦
⑧
① Front frame cover
② Frame cover (left, right)
③ Foot board (left, right)
④ Rear floor mat (left, right)
⑤ Lower frame cover (left, right)
⑥ Under cover
⑦ Frame cover (center)
⑧ Lower leg shield

FRONT PANEL BOX

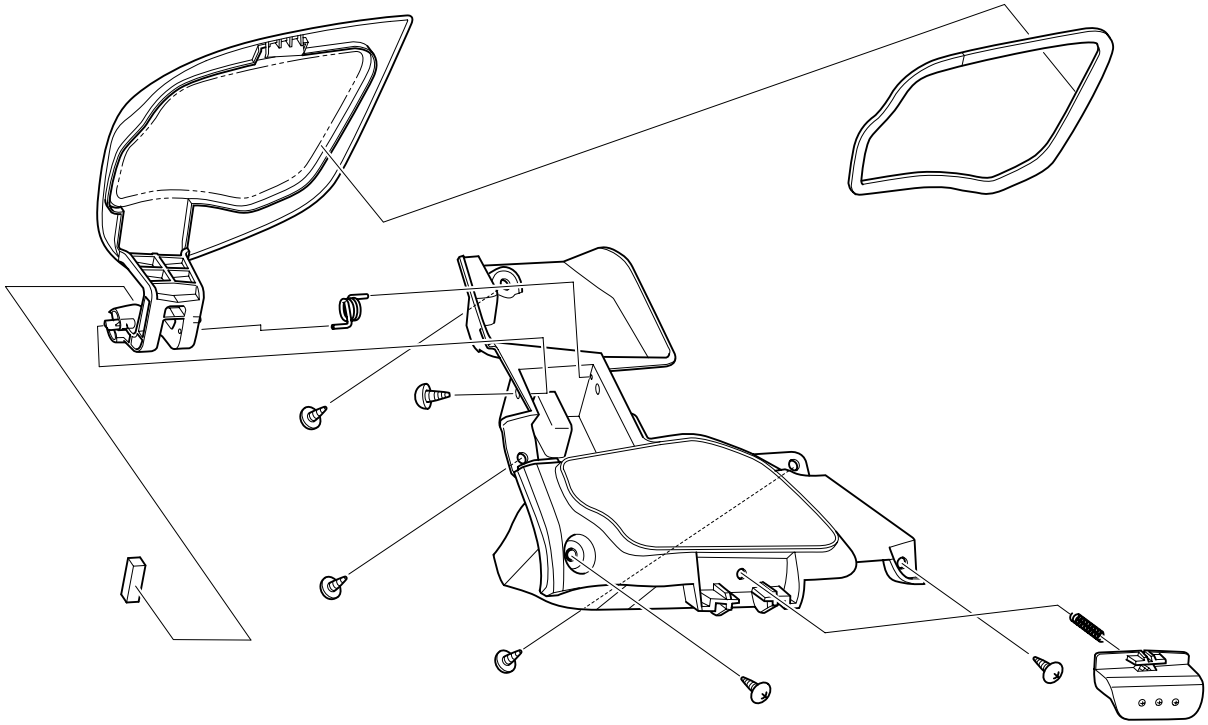

TRUNK BOX

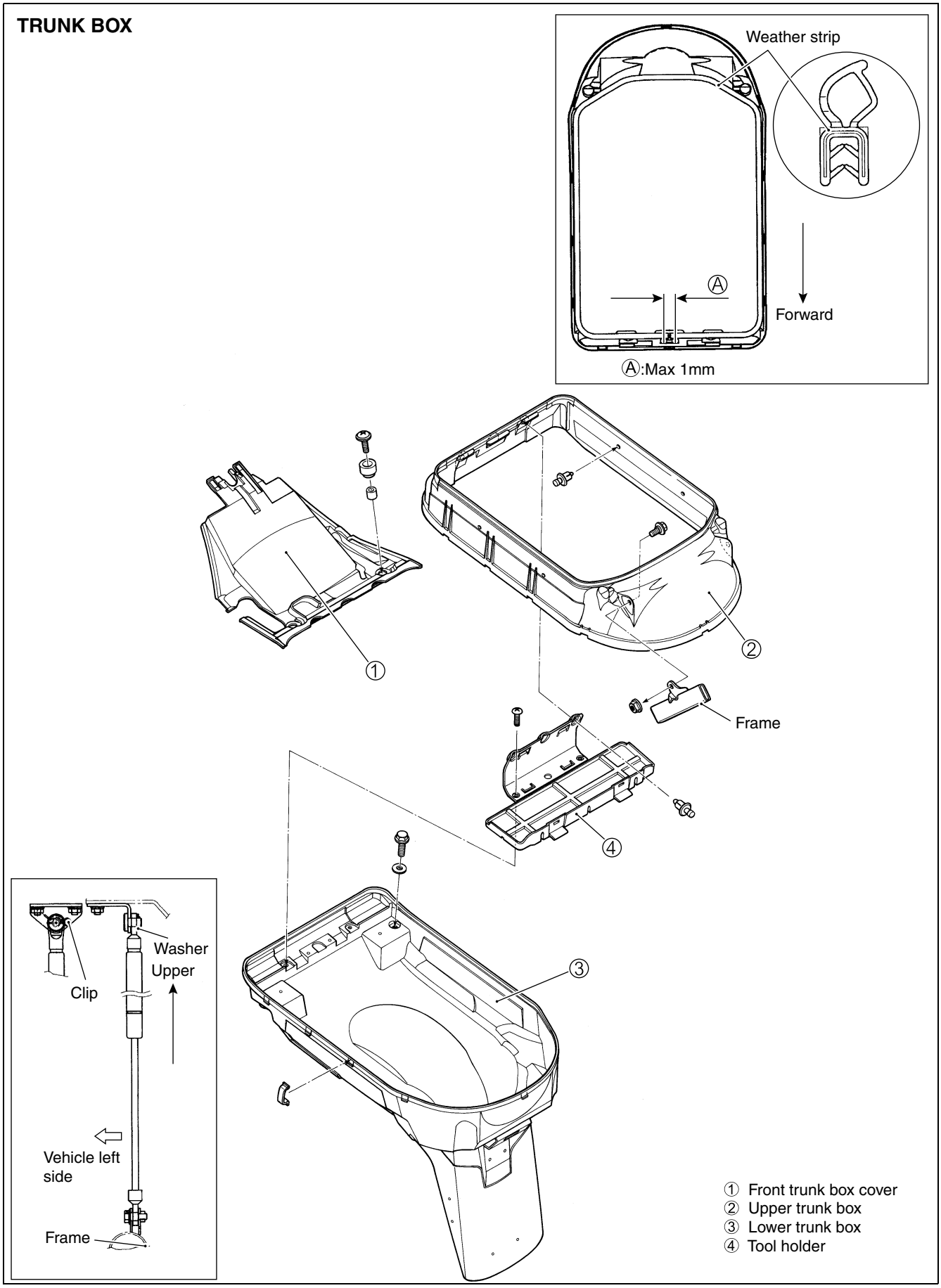
Weather strip
Ⓐ
Forward
Ⓐ:Max 1mm
①
②
Frame
④
③
Washer
Upper
Clip
Vehicle left side
Frame
① Front trunk box cover
② Upper trunk box
③ Lower trunk box
④ Tool holder

PILLION RIDER HANDLE

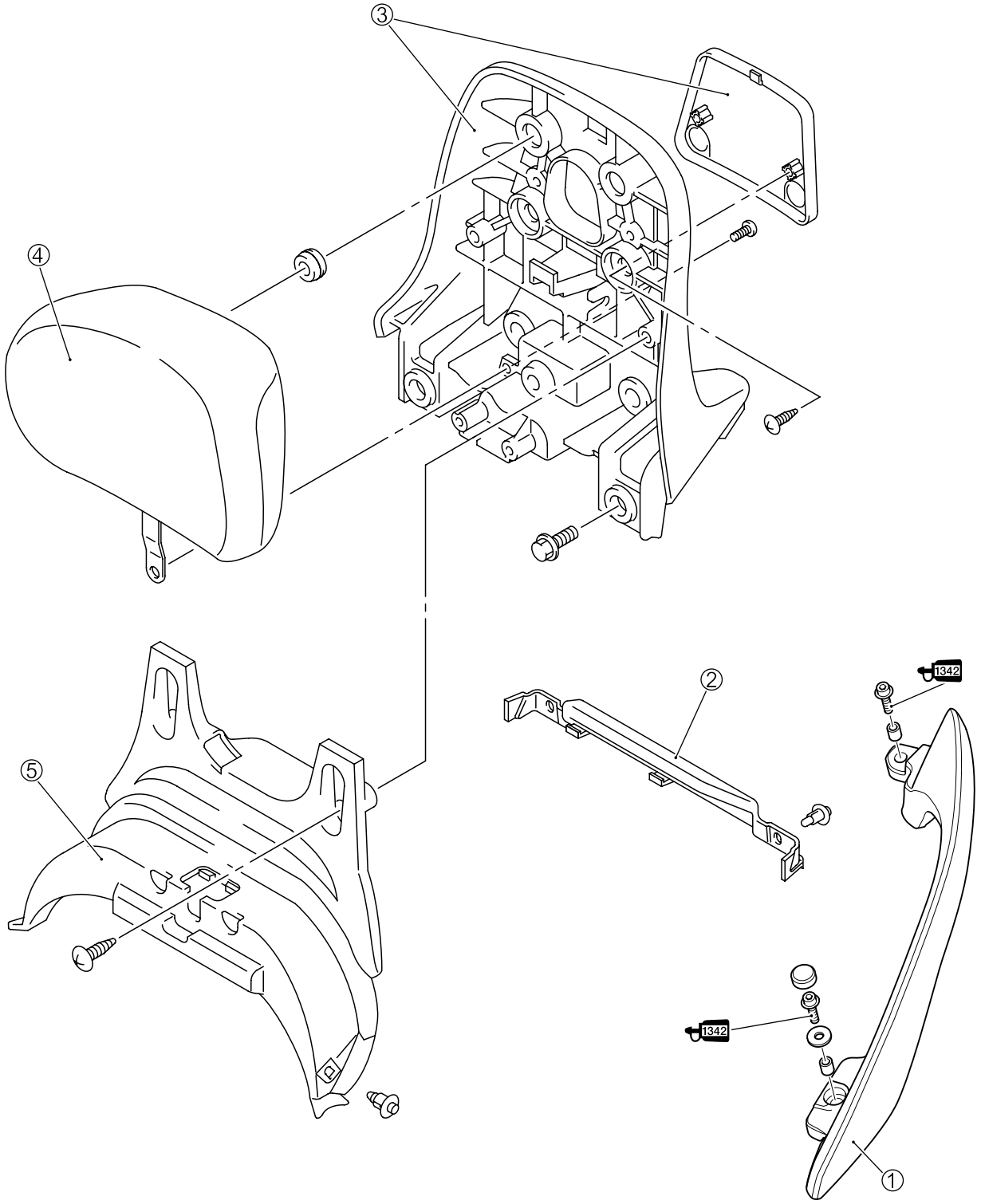

① Pillion rider handle (left, right)
② Rear pillion rider handle cover
③ Center pillion rider handle
④ Back-rest
⑤ Front pillion rider handle cover

REMOVAL

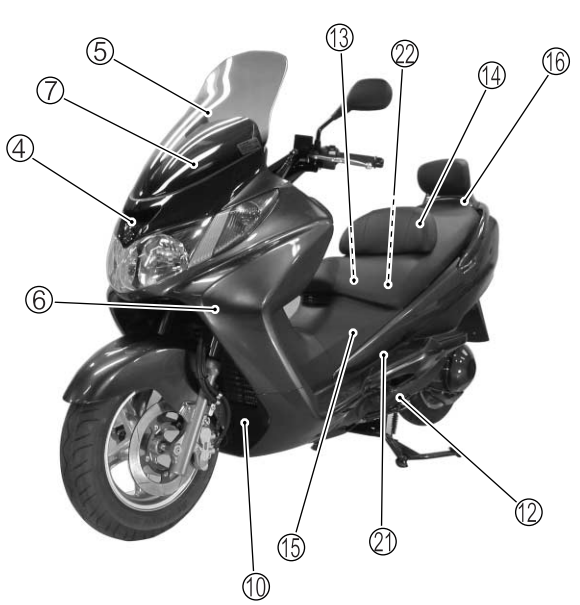

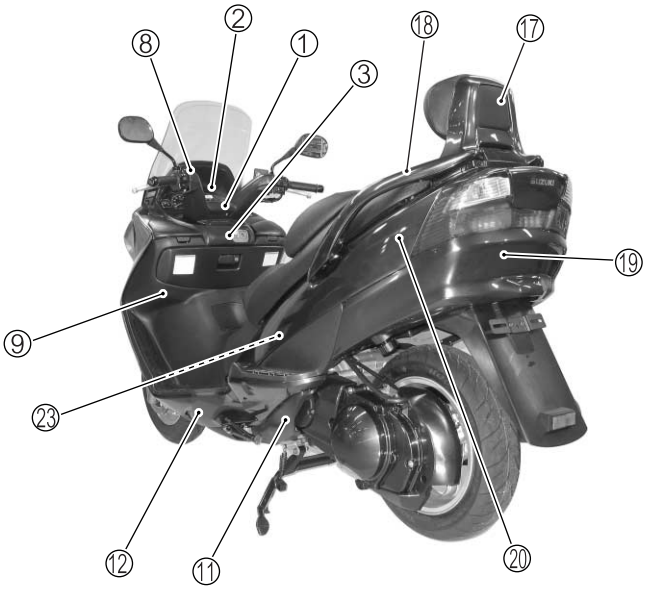

REMOVAL PROCEDURE FLOW CHART

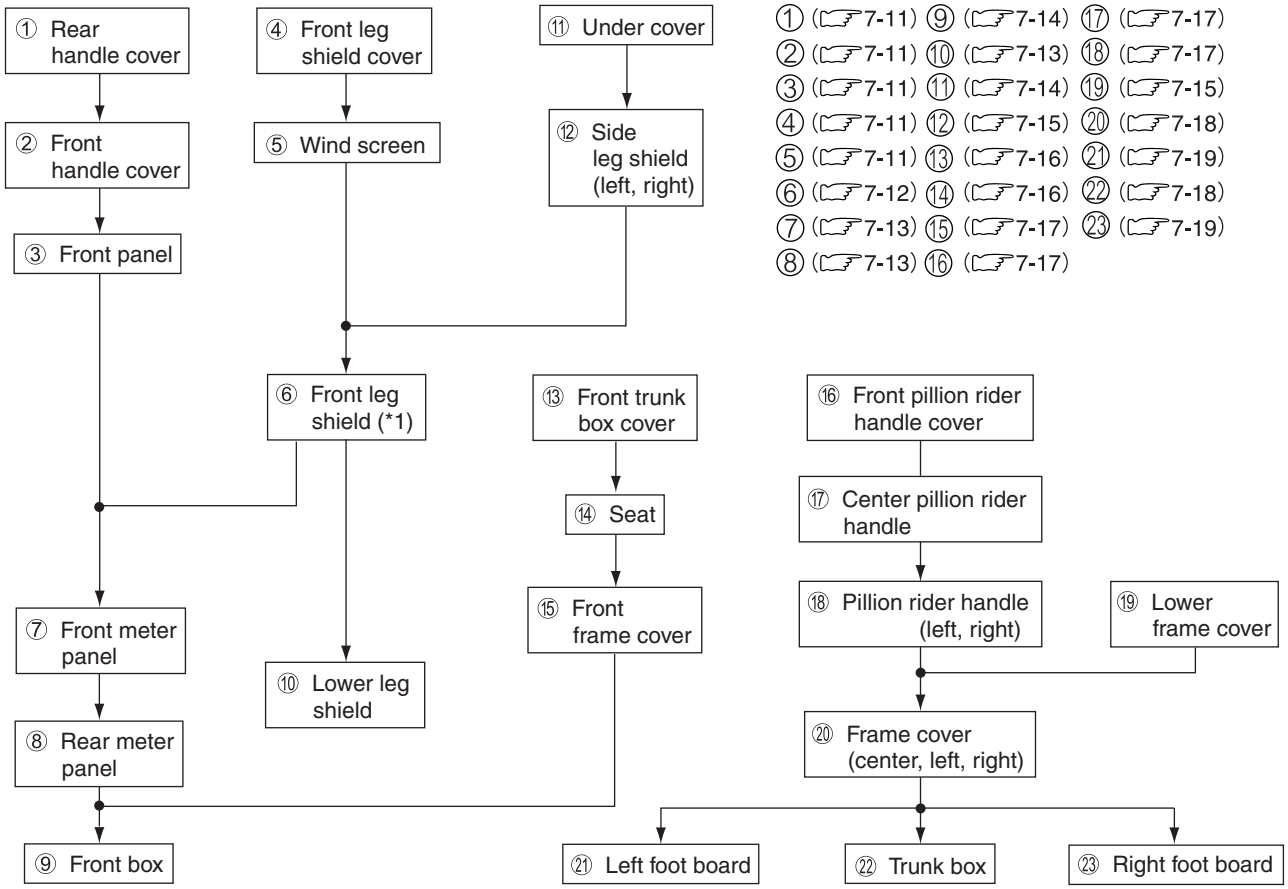

①	(☞7-11)	⑨	(☞7-14)	⑰	(☞7-17)
②	(☞7-11)	⑩	(☞7-13)	⑱	(☞7-17)
③	(☞7-11)	⑪	(☞7-14)	⑲	(☞7-15)
④	(☞7-11)	⑫	(☞7-15)	⑳	(☞7-18)
⑤	(☞7-11)	⑬	(☞7-16)	㉑	(☞7-19)
⑥	(☞7-12)	⑭	(☞7-16)	㉒	(☞7-18)
⑦	(☞7-13)	⑮	(☞7-17)	㉓	(☞7-19)
⑧	(☞7-13)	⑯	(☞7-17)		

·*1: Also remove front floor mats Ⓐ,Ⓑ.

FASTENER REMOVAL AND REINSTALLATION

REMOVAL

- Depress the head of fastener center piece ①.
- Pull out the fastener.

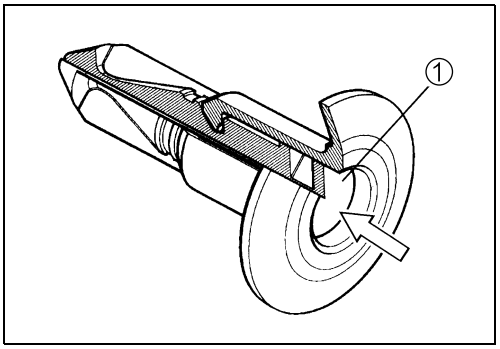

INSTALLATION

- Let the center piece stick out toward the head so that the pawls ② close.
- Insert the fastener into the installation hole.

NOTE:
To prevent the pawl ② from damage, insert the fastener all the way into the installation hole.

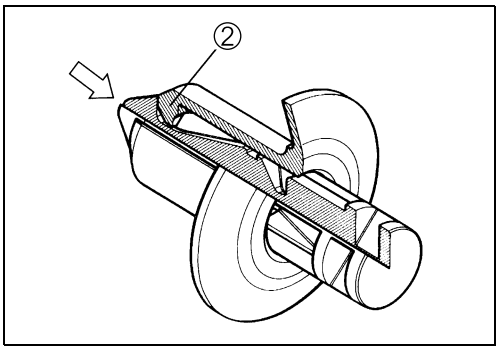

- Push in the head of center piece until it becomes flush with the fastener outside face.

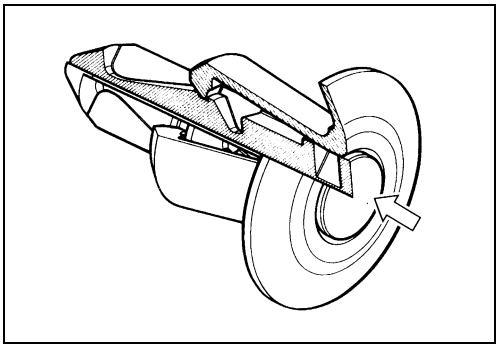

HANDLE COVER

- Remove the rear handle cover ①.
- Remove the front handle cover ②.

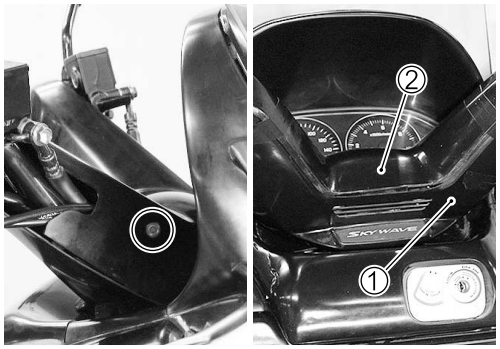

- Remove the front panel ③.

FRONT LEG SHIELD COVER

- Remove the screws.

- Remove the front leg shield cover ①.

☆ : Hooked part

WIND SCREEN

- Remove the front leg shield cover. (☞7-11)
- Remove the screws and wind screen ①.

FRONT LEG SHIELD

- Remove the wind screen. (☞7-11)
- Remove the side leg shield. (☞7-15)
- Remove the screws and fastener.

- Disconnect the front combination light couplers ①.
- Disconnect the headlight couplers ②.

- Disconnect the position light coupler ③. (Except for E-03, 28, 33.)

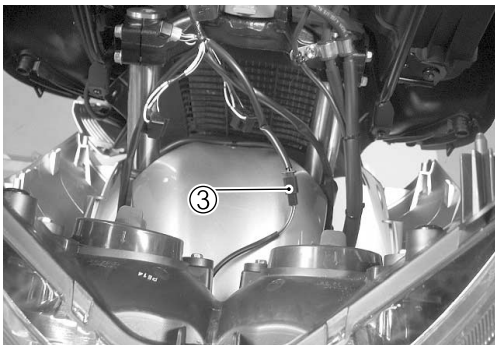

- Remove the front leg shield ④.

LOWER LEG SHIELD

- Remove the front leg shield. (☞7-12)
- Remove the lower leg shield ①.

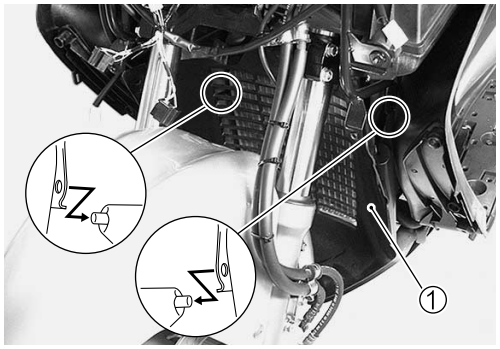

METER PANEL

- Remove the handle cover. (☞7-11)
- Remove the front leg shield. (☞7-12)
- Remove the screws.

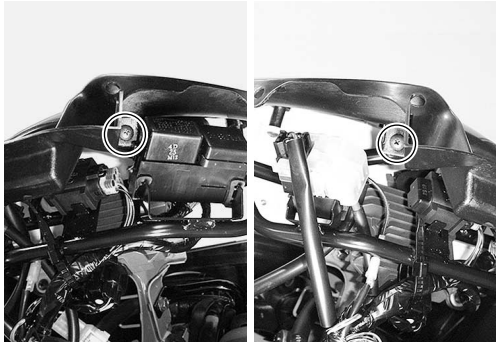

- Disconnect the speedometer coupler.

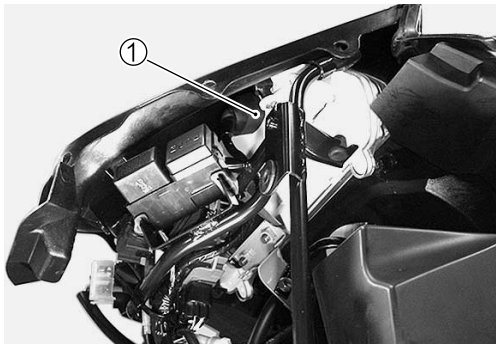

- Remove the screw ②.
- Remove the front meter panel ③.

- Remove the rear meter panel ④.

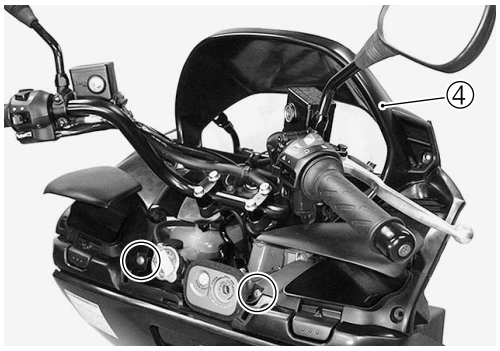

FRONT BOX

- Remove the front leg shield. (☞7-12)
- Remove the meter panel. (☞7-13)
- Remove the battery. (☞8-36)
- Remove the front frame cover. (☞7-17)
- Remove the brake-lock knob ①.

- Remove the accessories socket coupler ② and ECM coupler ③.

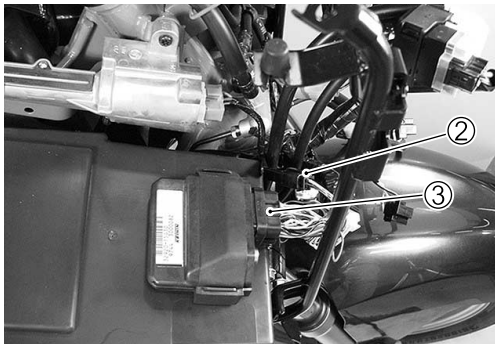

- Remove the bolts and screws.

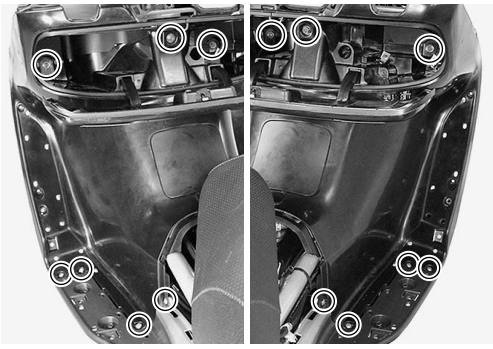

- Remove the front box ④.

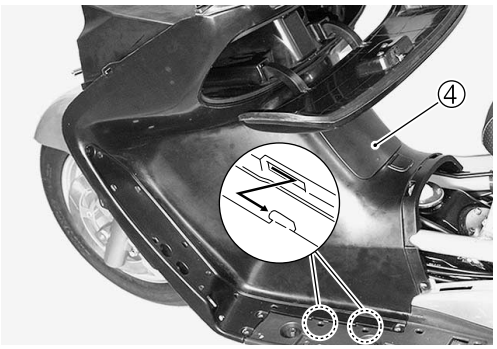

UNDER COVER

- Remove the fasteners.
- Remove the under cover ①.

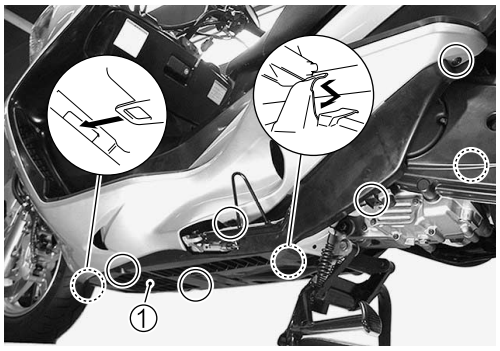

SIDE LEG SHIELD

- Remove the under cover. (☞7-14)
- Remove the front floor mats ①.
- Remove the rear floor mats ②.

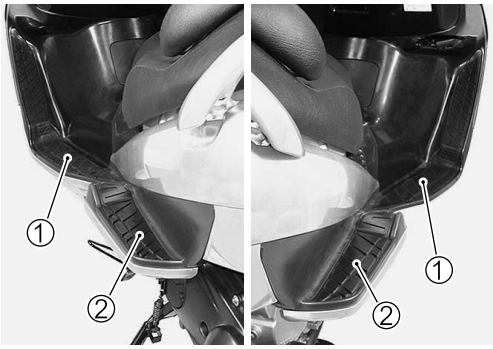

- Remove the fasteners and screws.

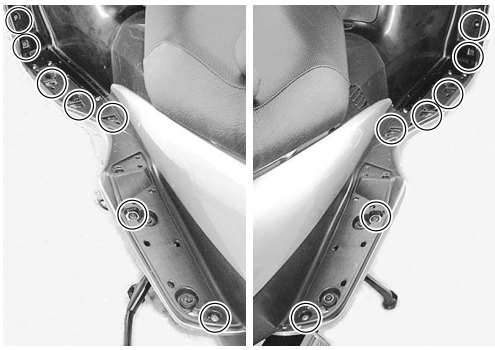

- Remove the left side leg shield ③.

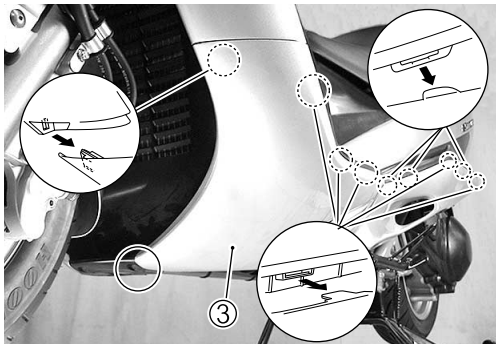

- Remove the right side leg shield ④.

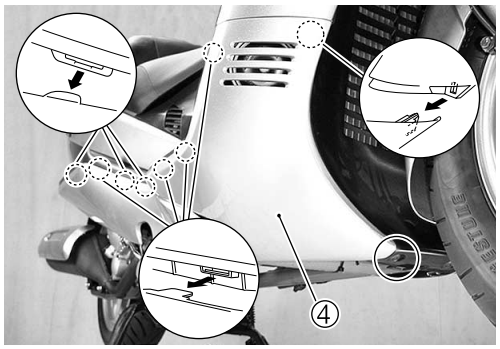

LOWER FRAME COVER

- Remove the fasteners.

- Remove the lower frame cover ①.

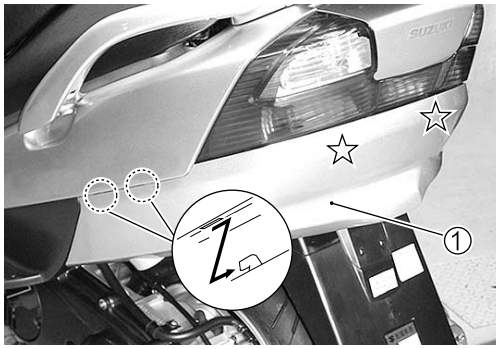

☆ : Hooked part

SEAT

- Uplift the seat.
- Remove the screws.

- Remove the front trunk box cover ①.

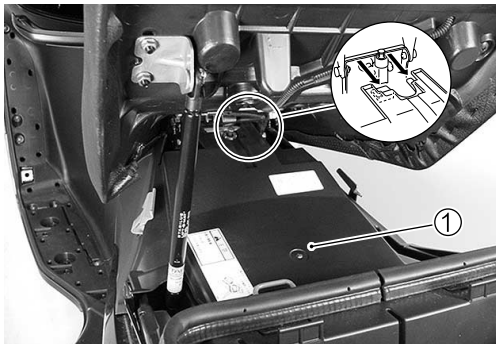

- Disconnect the seat damper ②.
- Remove the trunk box light coupler ③.

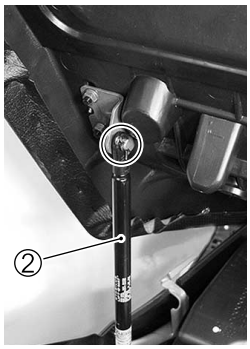

- Remove the nuts.
- Remove the seat ④.

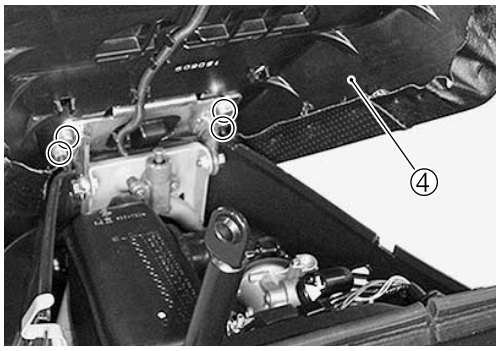

FRONT FRAME COVER

- Remove the seat. (☞7-16)
- Remove the fasteners.
- Remove the front frame cover ①.

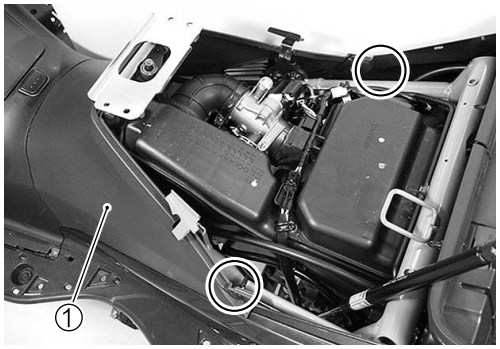

PILLION RIDER HANDLE

- Remove the rear pillion rider handle cover ①.

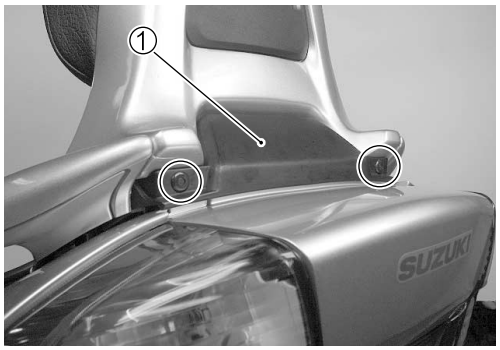

- Remove the screw ②.
- With the hooks drawn out, remove the back-rest ③.

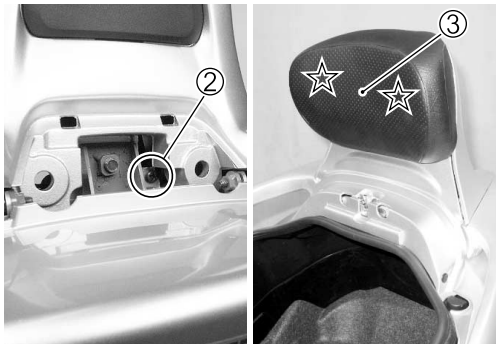

☆ : Hooked part

- Remove the front pillion rider handle cover ④.

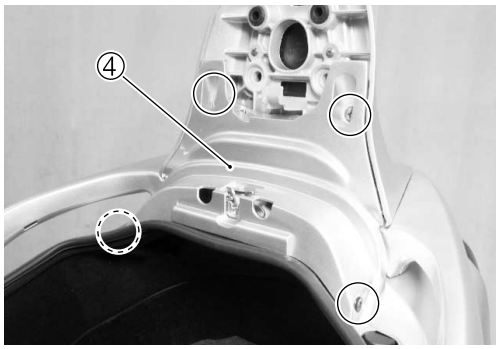

- Disconnect the seat lock cable ⑤.
- Remove the center pillion rider handle ⑥.

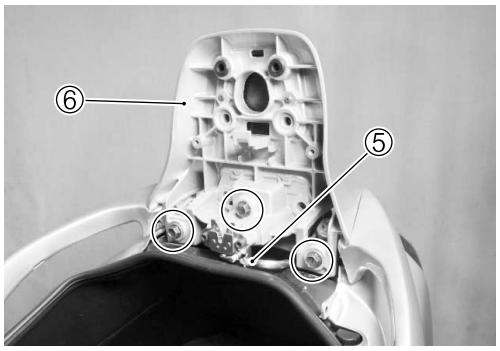

- Remove the left pillion rider handle ⑦ and right pillion rider handle ⑧.

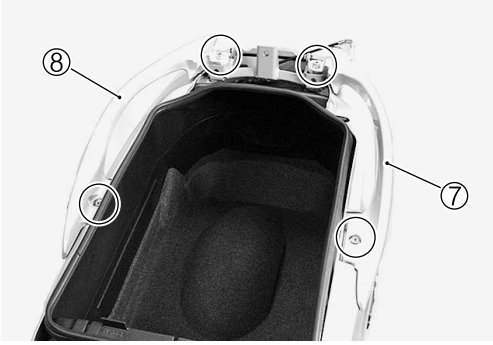

FRAME COVER

- Remove the lower frame cover. (☞7-15)
- Remove the front frame cover. (☞7-17)
- Remove the pillion rider handle. (☞7-17)
- Disconnect the licence light coupler ① and rear brake light coupler ②.

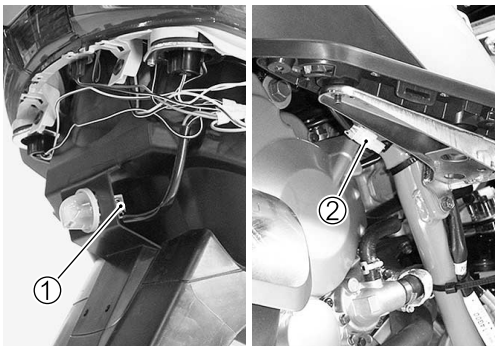

- Remove the four fasteners in the trunk box.
- Remove the screws.
- Remove the frame cover ③ with the center, left and right.

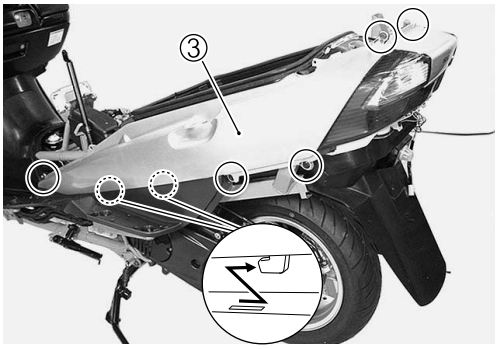

TRUNK BOX

- Remove the mat ①.

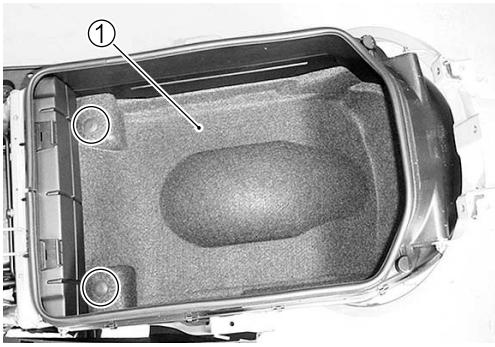

- Remove the bolts and nuts.
- Remove the trunk box ②.

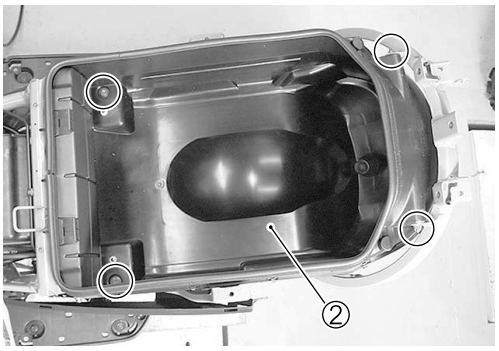

FOOT BOARD

- Remove the frame cover. (☞7-18)
- Remove the bolts and screws.
- Remove the left foot board ①.

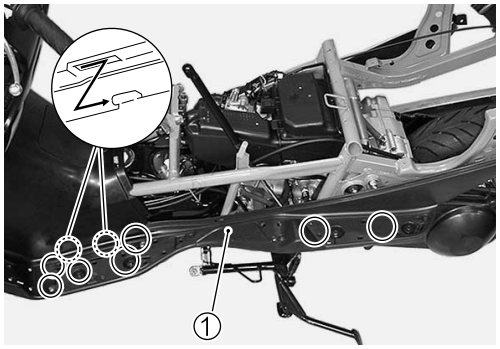

- Remove the bolts and screws.
- Remove the right foot board ②.

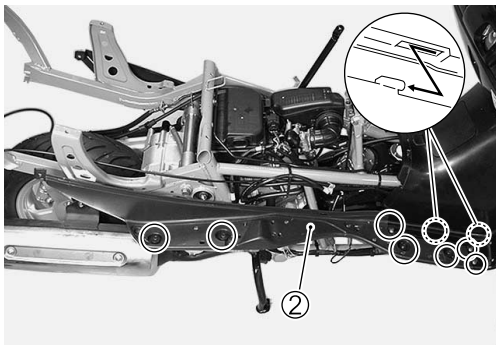

INSTALLATION

- Install the exterior parts in the revers order of removal.
- Pay attention to the following points:

PILLION RIDER HANDLE

- Apply THREAD LOCK to the pillion rider handle (left, right) bolts.

1342 99000-32050: THREAD LOCK "1342"

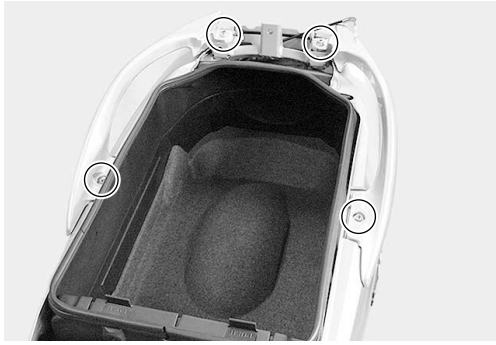

- Tighten the pillion rider handle bolts to the specified torque.

Pillion rider handle bolt: 23 N·m (2.3 kgf-m, 16.5 lb-ft)

FRONT WHEEL

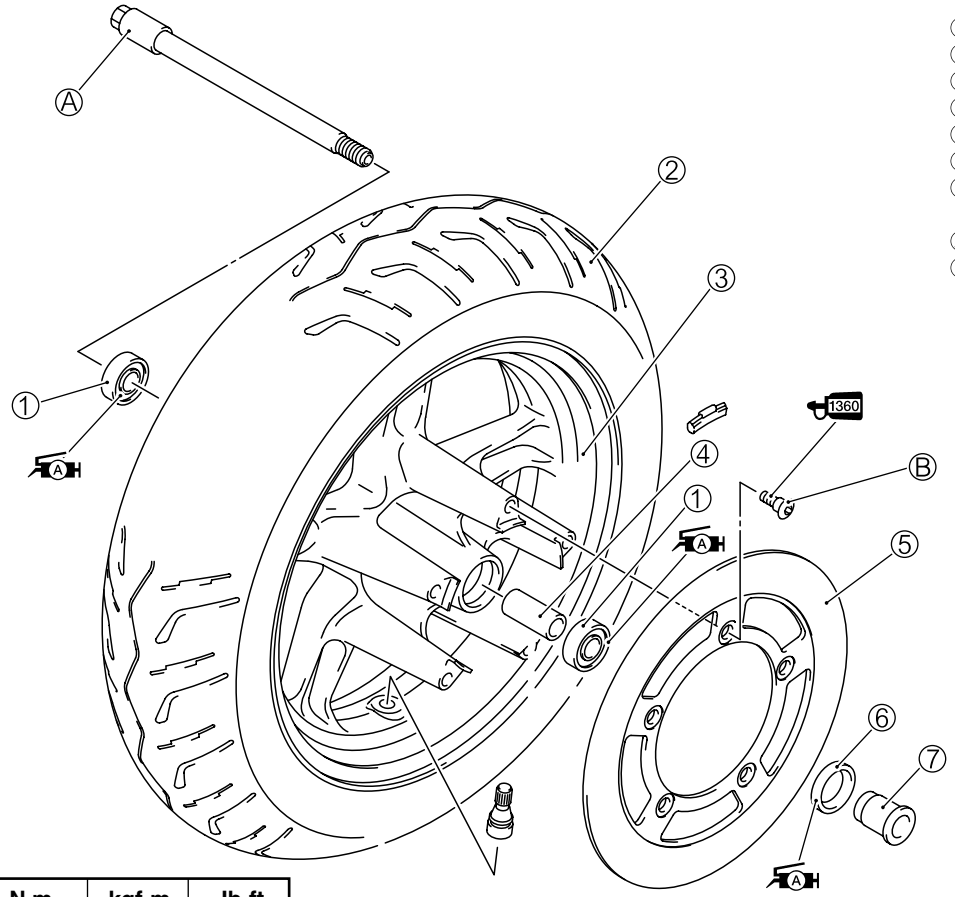

① Wheel bearing
② Front tire
③ Front wheel
④ Spacer
⑤ Brake disc
⑥ Dust seal
⑦ Spacer

Ⓐ Front axle
Ⓑ Brake disc bolt

ITEM	N·m	kgf-m	lb-ft
Ⓐ	65	6.5	47.0
Ⓑ	23	2.3	16.5

REMOVAL AND DISASSEMBLY

- Loosen the axle pinch bolt ① and then the front axle ②.
- Lift the front wheel off the ground using a jack.

CAUTION

When using a jack, take care not to cause scratches on the chassis.

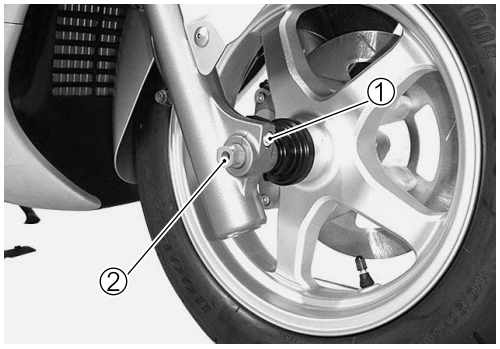

NOTE:
In this operation, the clamp bolt ③ should be removed so as not to cause the speed sensor lead wires to be pulled tight.

- Draw out the front axle and remove the front wheel.

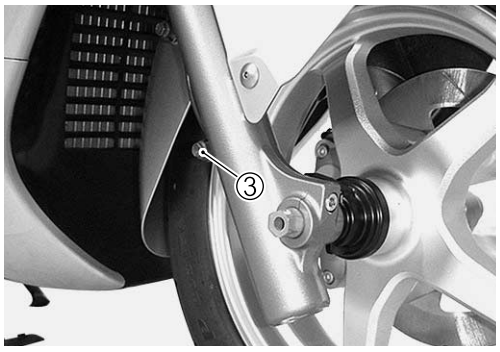

- Remove the dust seal ①.

TOOL 09913-50121: Oil seal remover

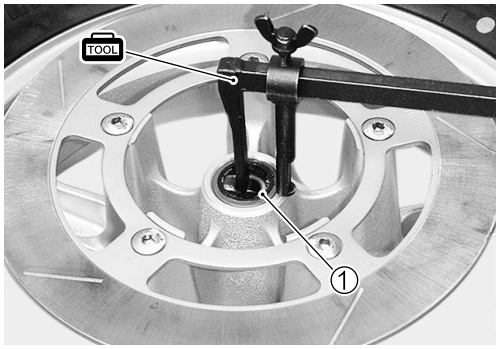

- Remove the brake disc ②.

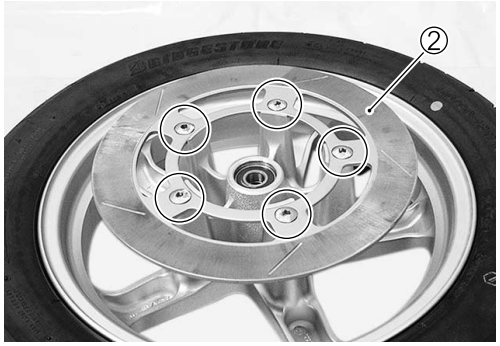

INSPECTION

FRONT WHEEL

- Measure the wheel runout using a dial gauge with the brake caliper detached.
- If the runout is found to exceed the service limit, inspect the bearing.

DATA Service Limit:
Front wheel runout (Radial and Axial): 2.0 mm (0.08 in)

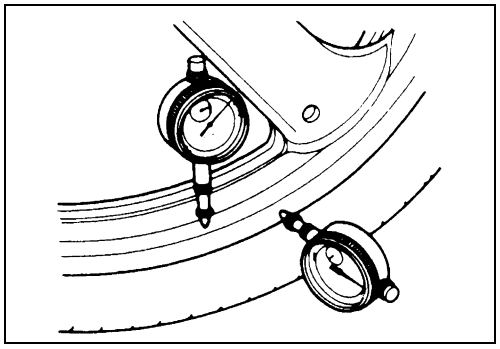

WHEEL BEARING

- The wheel bearing inspection must be performed with the bearing installed in the wheel.
- Turn the bearing inner race by hand to see if there is no abnormal play or noise. Also check for smoothness of turning.
- If any abnormal condition is found, replace the bearing with a new one.

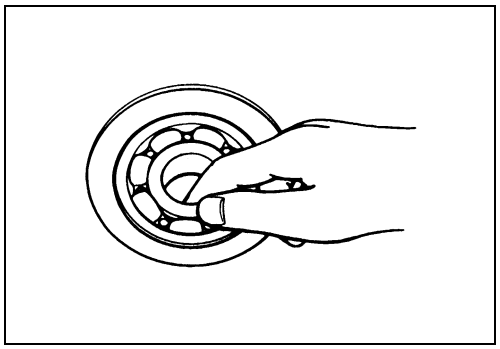

WHEEL BEARING REPLACEMENT

- Remove the wheel bearings using the special tool.

TOOL 09921-20240: Bearing remover set

CAUTION

Do not reuse the removed bearings.

FRONT AXLE

- Using a dial gauge, check the front axle for runout.
- If the runout measured exceeds the service limit, replace the axle shaft.

DATA Front axle runout: Service Limit: 0.25 mm (0.010 in)

TOOL 09900-20607: Dial gauge (1/100 mm)
09900-20701: Magnetic stand
09900-21304: V-block

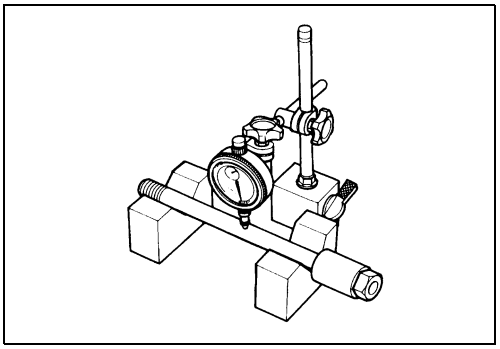

TIRE

- Tire inspection (☞7-78)

REASSEMBLY AND REMOUNTING

- Reassemble and remount the front wheel in the reverse order of removal and disassembly.
- Pay attention to the following points:

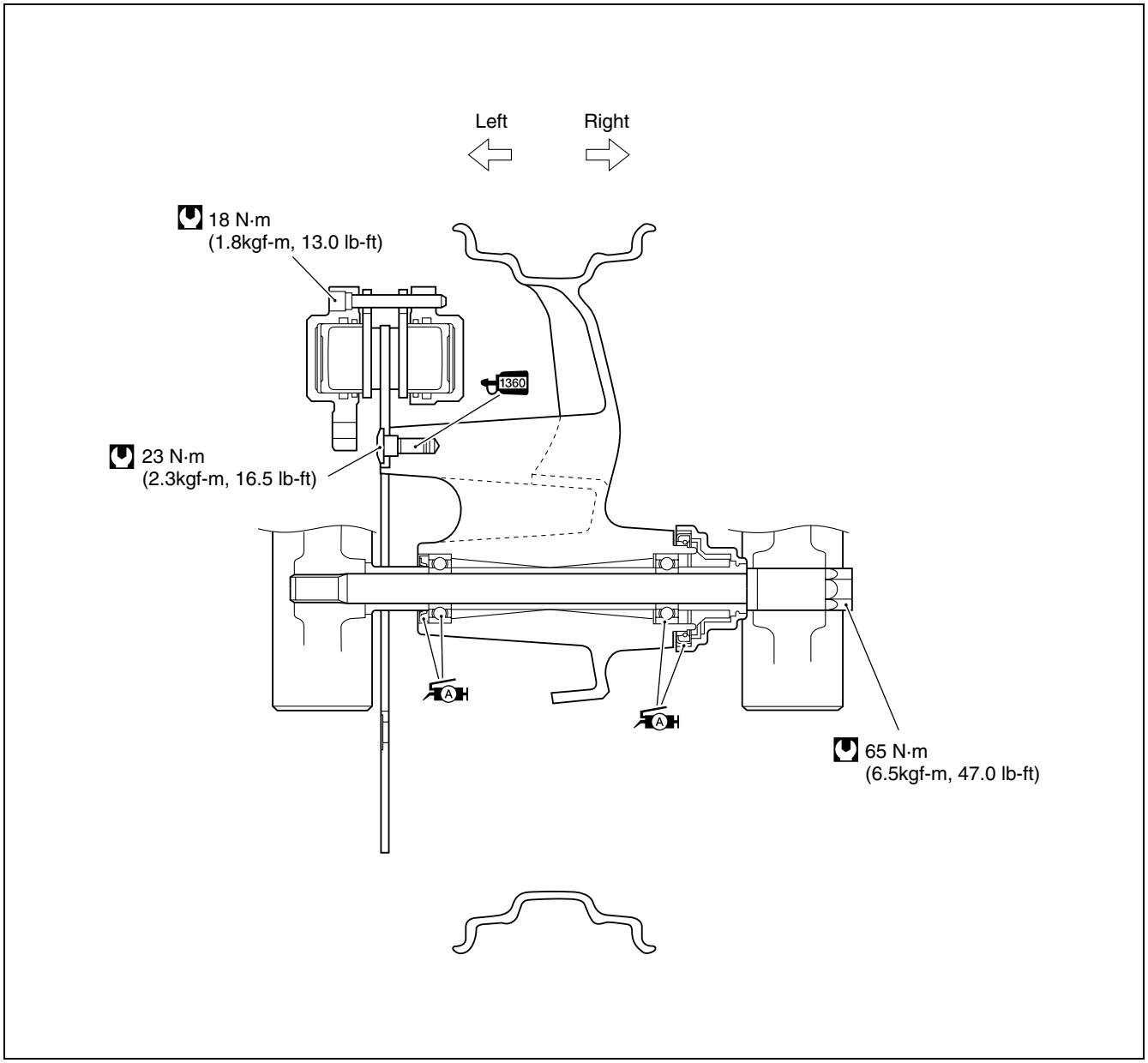

WHEEL BEARING

- Apply SUZUKI SUPER GREASE to the new wheel bearings.

99000-25010: SUZUKI SUPER GREASE "A" (Others)
99000-25030: SUZUKI SUPER GREASE "A" (USA)

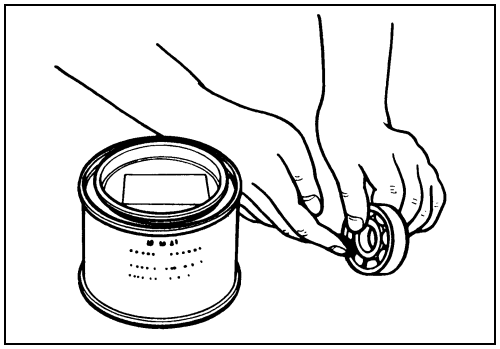

- Using the special tool, press-fit the left bearing.
- Fit the spacer and press-fit the right bearing.

09924-84521: Bearing installer set

CAUTION

*** Position the sealed side of bearing facing outside.**
*** Use care not to allow the spacer to skew.**

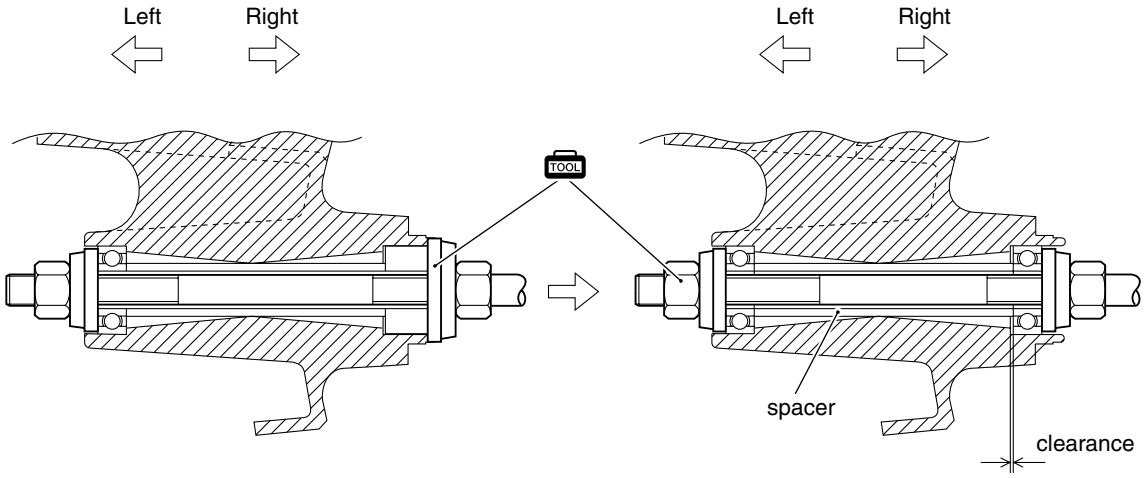

BRAKE DISC

- Apply THREAD LOCK to the brake disc bolts and tighten them to the specified torque.

99000-32130: THREAD LOCK SUPER "1360"

Brake disc bolt: 23 N·m (2.3 kgf-m, 16.5 lb-ft)

WARNING

Keep the brake disc clean, free from dirt and grease.

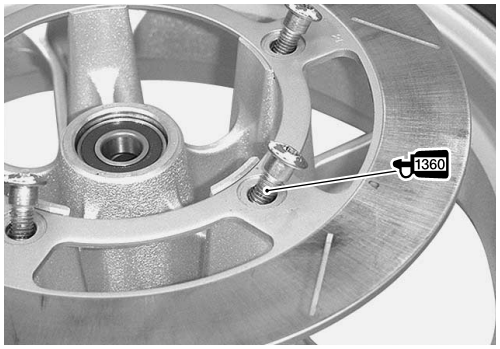

DUST SEAL

- Press-fit the dust seal ① using the special tool.

09913-70210: Bearing installer set (35 mm)

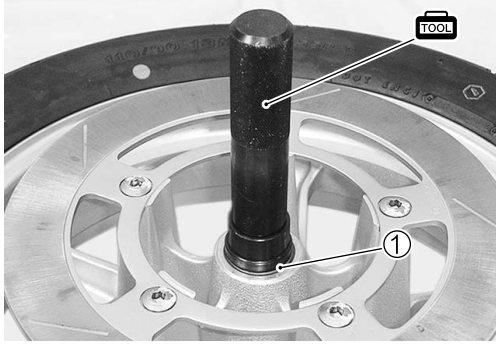

SPACER

- Install the spacer ①.
- Apply SUZUKI SUPER GREASE to the dust seal lip.

99000-25010: SUZUKI SUPER GREASE "A" (Others)
99000-25030: SUZUKI SUPER GREASE "A" (USA)

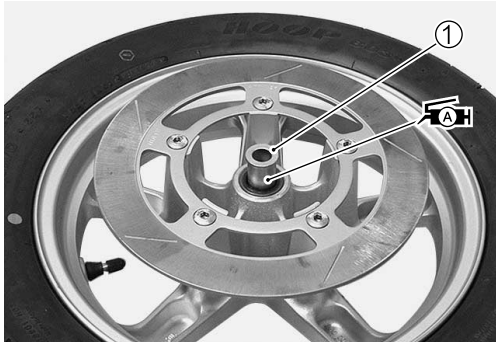

WHEEL

- Apply SUZUKI SUPER GREASE to the convex parts of wheel.

99000-25010: SUZUKI SUPER GREASE "A" (Others)
99000-25030: SUZUKI SUPER GREASE "A" (USA)

- With the recesses on the wheel engaged with the drive lugs on the speed sensor, position the wheel to the front fork while also aligning the speed sensor with the fork stopper.

- Tighten the front axle ① to the specified torque.

Front axle: 65 N·m (6.5 kgf-m, 47.0 lb-ft)

- Tighten the axle pinch bolt ②.

Axle pinch bolt: 23 N·m (2.3 kgf-m, 16.5 lb-ft)

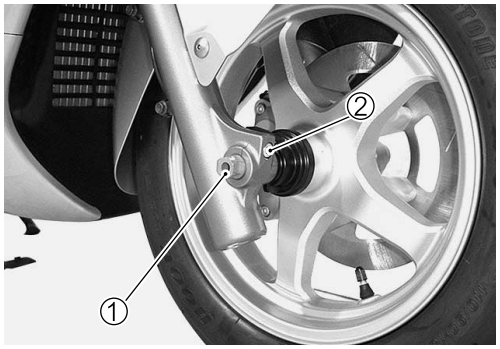

FRONT BRAKE

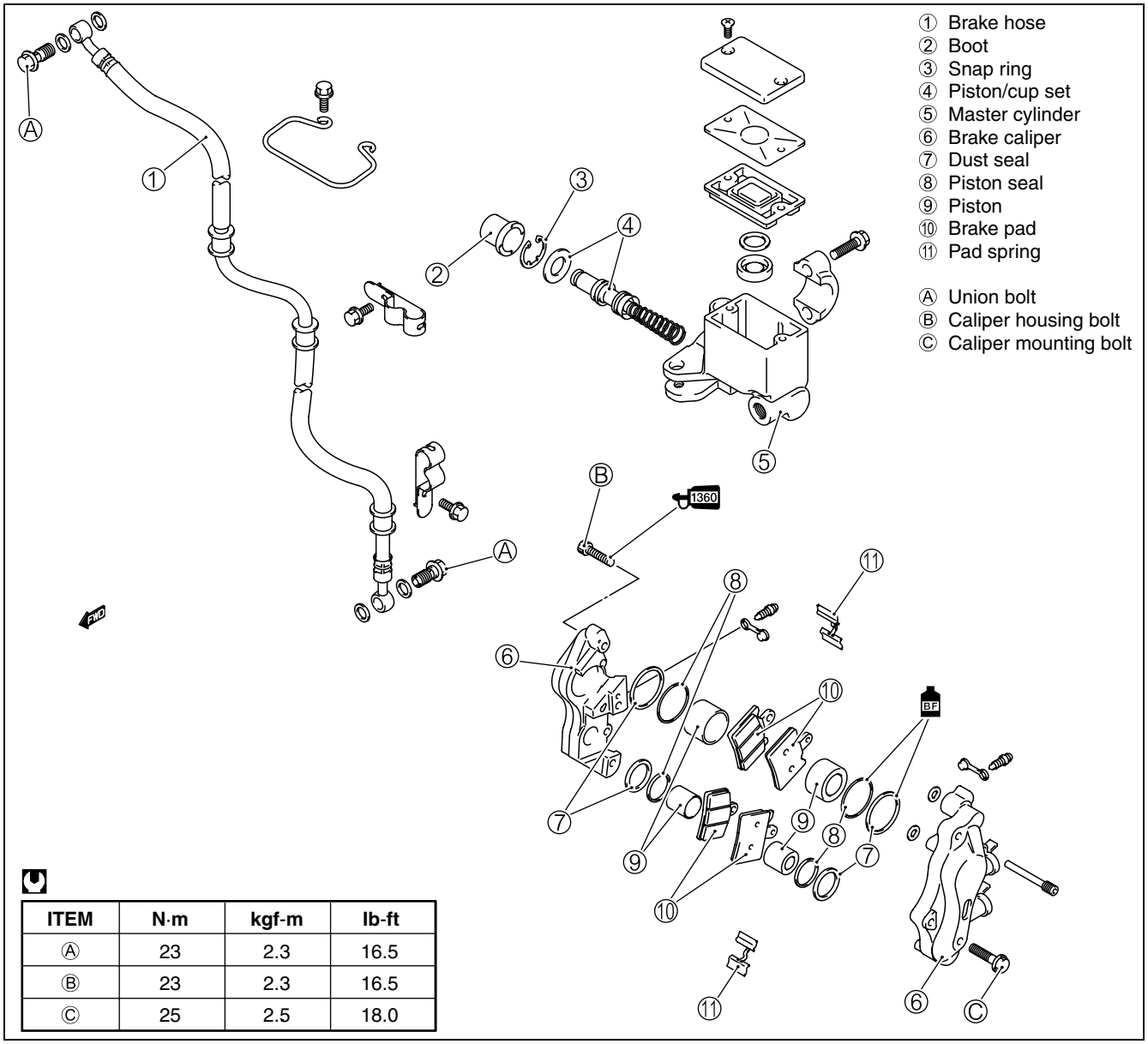

ITEM	N·m	kgf-m	lb-ft
Ⓐ	23	2.3	16.5
Ⓑ	23	2.3	16.5
Ⓒ	25	2.5	18.0

⚠ WARNING

- **This brake system is filled with an ethylene glycol-based DOT 4 brake fluid. Do not use mix different types of fluid such as silicone-based or petroleum-based.**
- **Do not use any brake fluid taken from old, used or unsealed containers. Never reuse brake fluid left over from the last servicing or stored for long periods.**
- **When storing the brake fluid, seal the container completely and keep away from children.**
- **When replenishing brake fluid, take care not to get dust into fluid.**
- **When washing brake components, use fresh brake fluid. Never use cleaning solvent.**
- **A contaminated brake disc or brake pad reduces braking performance. Discard contaminated pads and clean the disc with high quality brake cleaner or neutral detergent.**

CAUTION

Handle brake fluid with care: the fluid reacts chemically with paint, plastics, rubber materials etc. and will damage then severly.

BRAKE FULID REPLACEMENT (☞2-17)
BRAKE FULID AIR BLEEDING (☞2-19)

BRAKE PAD REPLACEMENT

- Remove the front brake pad pin ①.
- Remove the front brake pads.
- Remove the combination brake pad pin ②.
- Remove the combination brake pads.

Pad pin: 18 N·m (1.8 kgf-m, 13.0 lb-ft)

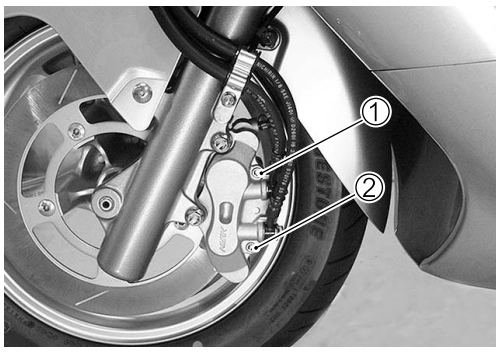

CAUTION

> *** Do not operate the brake lever while removing the brake pads.**
> *** Replace the brake pads as a set, otherwise braking performance will be adversely affected.**

- Reassemble the brake pad in the reverse order of disassembly.
- Pay attention to the following points:
- After replacing the brake pads, pump the brake lever several times in order to operate the brake correctly and then check the brake fluid level.

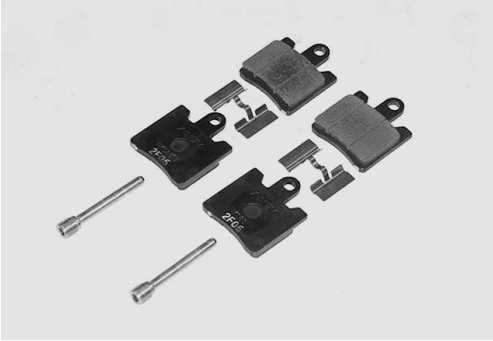

CALIPER REMOVAL AND DISASSEMBLY

- Drain brake fluid of both the front brake side and the combination brake side. (☞2-18)

CAUTION

> **To prevent brake fluid from splashing on the parts nearby, cover the parts with cloth.**

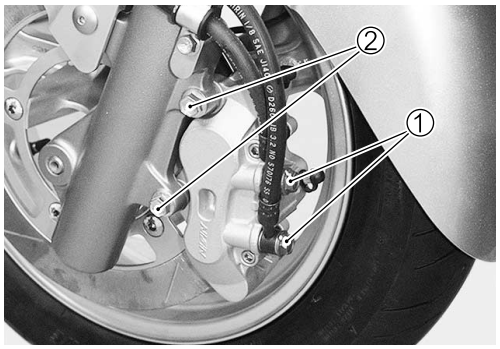

- Remove the union bolts ① and caliper mounting bolts ②.

- Remove the brake pad. (☞7-26)
- Remove the caliper housing bolts ③.

NOTE:
Slightly loosen the caliper housing bolts ③ before removing the caliper mounting bolts to facilitate later disassembly.

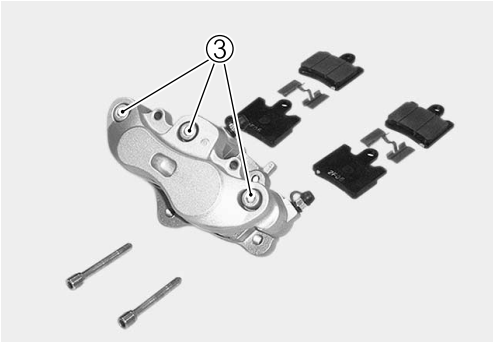

- Place a rag over the piston to prevent it from popping out and then force out the piston using compressed air.

⚠ WARNING

Do not use high pressure air to prevent piston damage.

- Remove the dust seals ④ and piston seals ⑤.

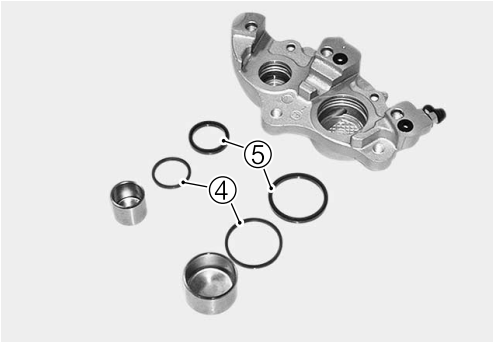

CAUTION

*** Use care not to cause scratch on the cylinder bore.**
*** Do not reuse the piston seal and dust seal that have been removed.**

CALIPER INSPECTION

- Inspect the caliper cylinder wall and piston surface for scratch, corrosion or other damages.
- If any abnormal condition is noted, replace the caliper.

CALIPER REASSEMBLY AND REMOUNTING

- Reassemble and remount the caliper in the reverse order of disassembly and removal.
- Pay attention to the following points:

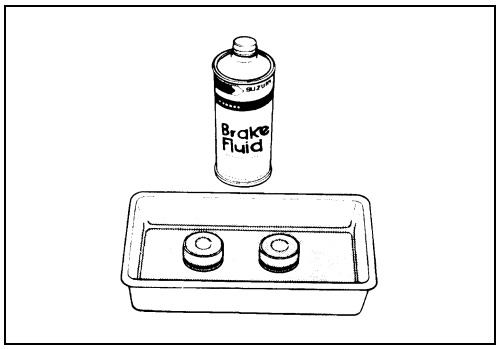

CAUTION

*** Wash the caliper components with fresh brake fluid before reassembly. Do not wipe off brake fluid after washing the components.**
*** Replace the piston seal, dust seal and O-ring with new ones with brake fluid applied.**

BF Specification and classification: DOT 4

- Install the piston seal ① and dust seal ② as shown in the illustration.

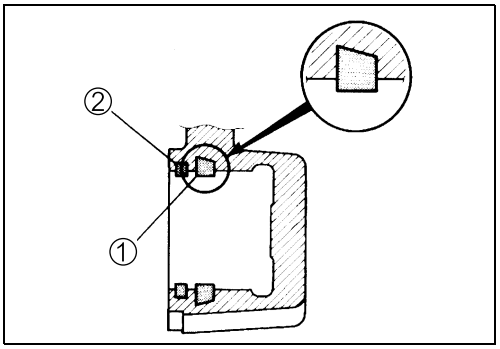

- Install the O-rings ③.

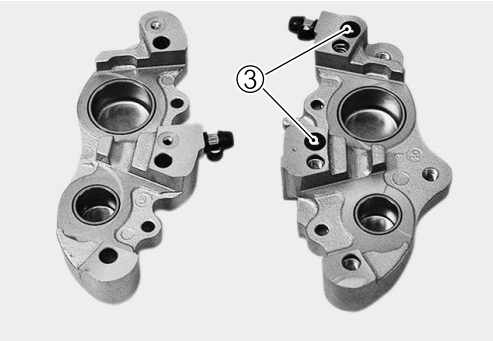

- Apply THREAD LOCK SUPER to the caliper housing bolts ④.
- Tighten the caliper housing bolts to the specified torque.

Caliper housing bolt: 23 N·m (2.3 kgf-m, 16.5 lb-ft)

1360 99000-32130: THREAD LOCK SUPER "1360"

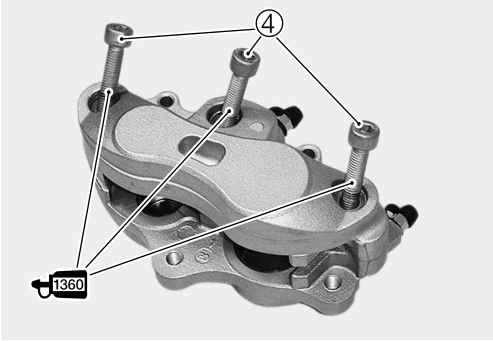

- Tighten the caliper mounting bolts ⑤ to the specified torque.
- With the hose ends contacted to the stoppers, tighten the union bolts ⑥ to the specified torque.

⑤ Caliper mounting bolt: 25 N·m (2.5 kgf-m, 18.0 lb-ft)
⑥ Union bolt: 23 N·m (2.3 kgf-m, 16.5 lb-ft)

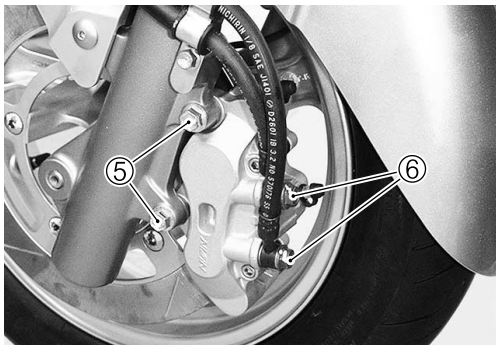

- For assembly procedure of brake hose. (☞9-23)
- Fill the system with brake fluid and bleed air. (☞2-19)

- Perform the brake inspection after assembly has been completed. (☞2-16)

BRAKE DISC INSPECTION

- Check the brake disc surface for scratch, crack or abnormal wear.
- Measure the disc thickness at several positions using a micrometer.
- If the measurement is less than the service limit or any abnormal condition is noted, replace the disc with a new one. (☞7-21)

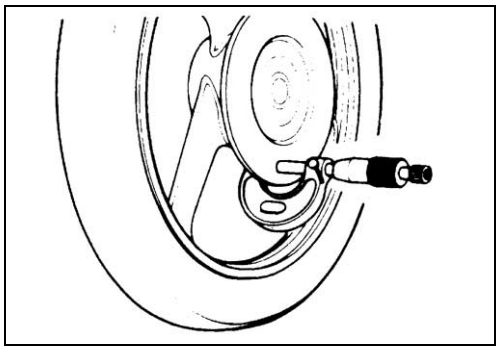

DATA Brake disc thickness: Service Limit: 4.0 mm (0.16 in)

TOOL 09900-20205: Micrometer (0 – 25 mm)

- Measure the runout with a dial gauge.
- Replace the disc if the runout exceeds the service limit.

DATA Brake disc runout: Service Limit: 0.30 mm (0.012 in)

TOOL 09900-20607: Dial gauge (1/100 mm)
09900-20701: Magnetic stand

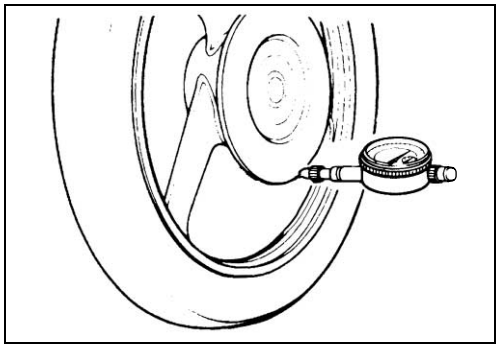

MASTER CYLINDER REMOVAL AND DISASSEMBLY

- Remove the handle covers. (☞7-11)
- Drain brake fluid from the front brake side reservoir. (☞2-17)
- Remove the rear view mirror ①.
- Disconnect the brake light switch lead wires ②.

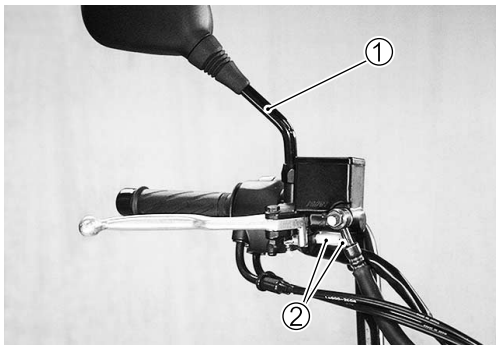

- Remove the union bolt ③.

CAUTION

Place a rag under the union bolt so that brake fluid may not contact the parts.

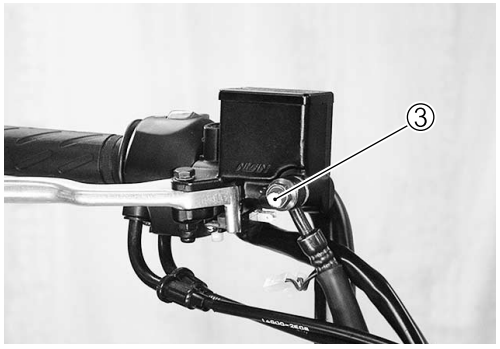

- Remove the master cylinder ④.

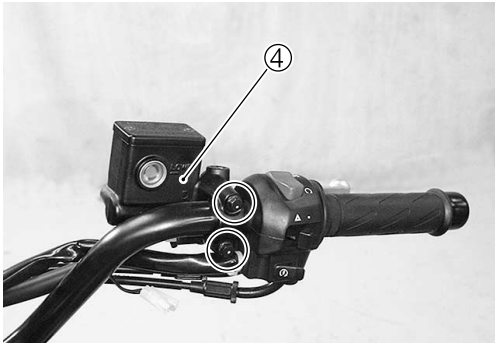

- Remove the brake light switch ⑤ and brake lever ⑥.

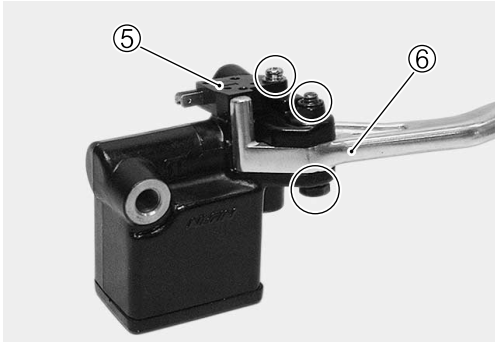

- Remove the boot ⑦ and remove the snap ring ⑧.
- Remove the piston/cup set ⑨ and spring ⑩.

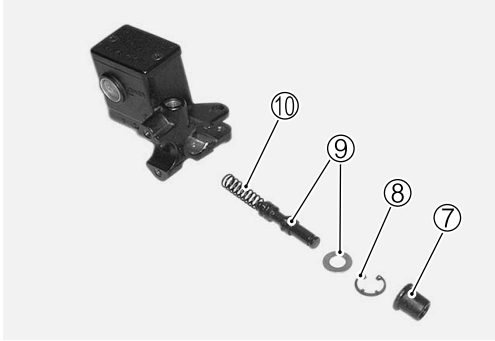

MASTER CYLINDER INSPECTION

- Inspect the cylinder wall, piston/cup set and spring for scratch, corrosion or other damages.
- If any abnormal condition is noted, replace the inner parts or master cylinder.

MASTER CYLINDER REASSEMBLY AND REMOUNTING

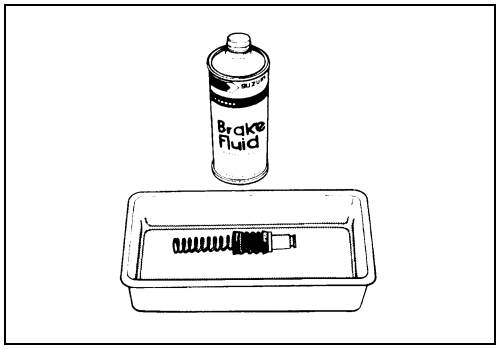

- Reassemble and remount the master cylinder in the reverse order of disassembly and removal.
- Pay attention to the following points:

CAUTION

*** Wash each component with fresh brake fluid before reassembly. Do not wipe off brake fluid after washing the components.**
*** Replace the cup set (piston, primary cup, secondary cup and spring) with a new one with brake fluid applied.**

- For assembly of the piston/cup set, refer to the right illustration.

① Boot
② Spring
③ Primary cup
④ Piston
⑤ Secondary cup
⑥ Snap ring

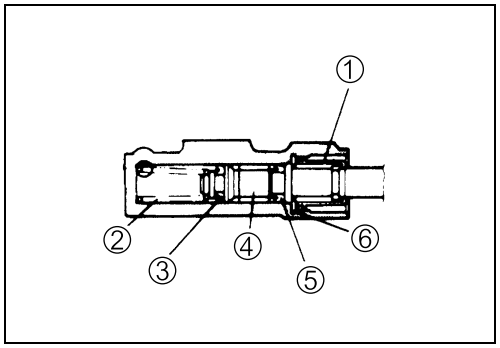

- With the convex part Ⓐ of brake light switch with the hole Ⓑ of master cylinder, assemble the brake light switch.

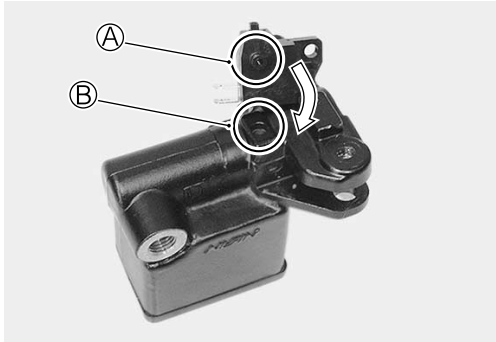

- When remounting the brake master cylinder onto the handlebars, align the master cylinder holder's mating surface with punch mark Ⓒ on the handlebars.
- Tighten the upper bolt first temporarily to provide clearance on the lower side and then tighten both the bolts to the specification.

Master cylinder bolt: 10 N·m (1.0 kgf-m, 7.0 lb-ft)

- Install the brake hose and tighten the union bolt ①. (☞9-23)

Union bolt: 23 N·m (2.3 kgf-m, 16.5 lb-ft)

- Fill the system with brake fluid and bleed air. (☞2-19)

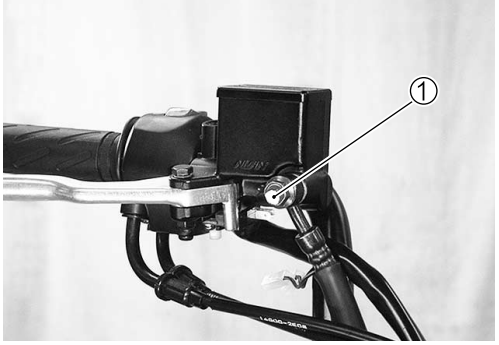

- Perform the front brake inspection after assembly has been completed. (☞2-16)

HANDLEBARS

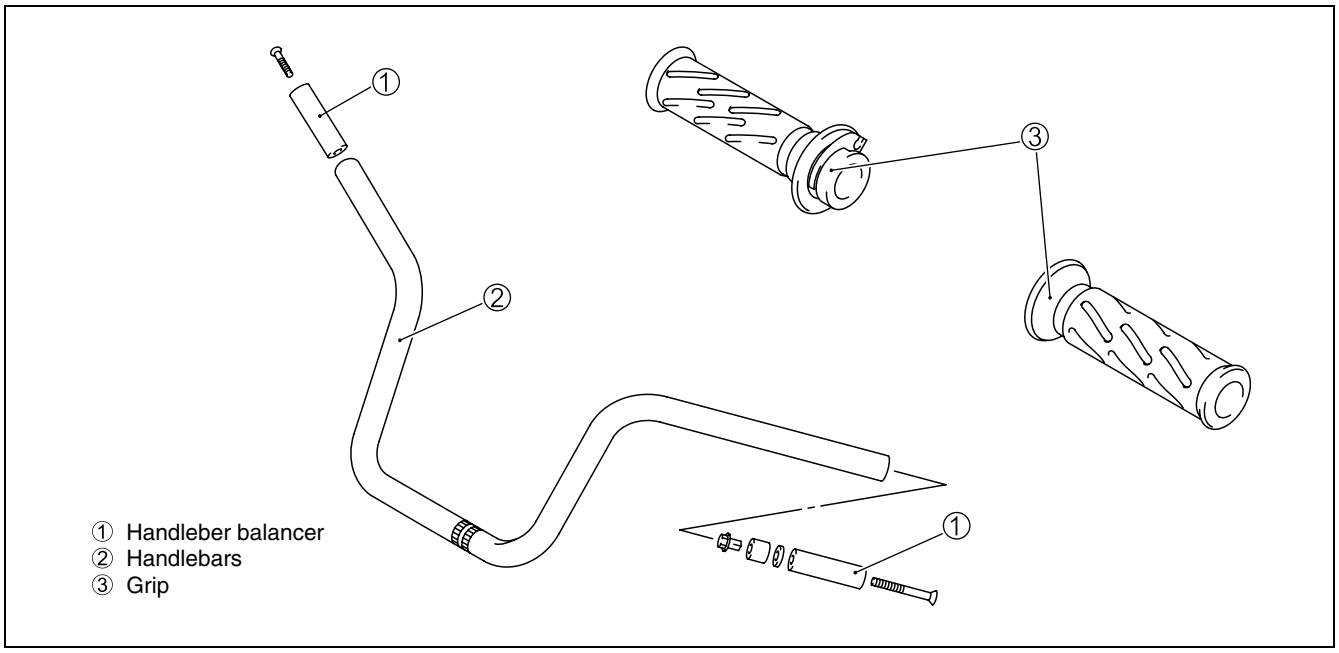

REMOVAL

- Remove the handle cover. (☞7-11)
- Remove the rear view mirror ①.
- Remove the left handlebar switches ②.
- Disconnect the brake light switch lead wires ③ and remove the master cylinder ④. (☞7-60)
- Remove the handlebar balancer ⑤ and grip ⑥.

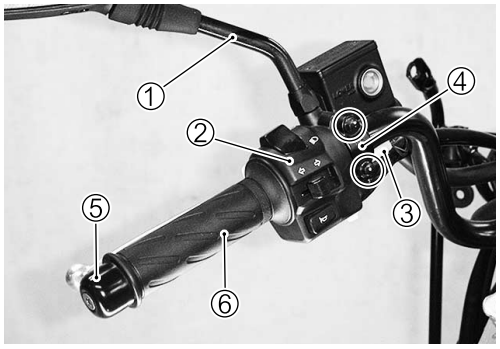

- Remove the rear view mirror ⑦.
- Remove the right handlebar switches ⑧.
- Disconnect the brake light switch lead wires ⑨ and remove the master cylinder ⑩. (☞7-29)
- Remove the handlebar balancer ⑪ and grip ⑫.

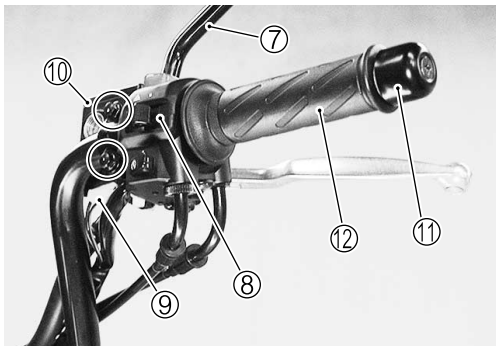

- Remove the bolts and remove the handlebar holders ⑬.
- Remove the handlebars ⑭.

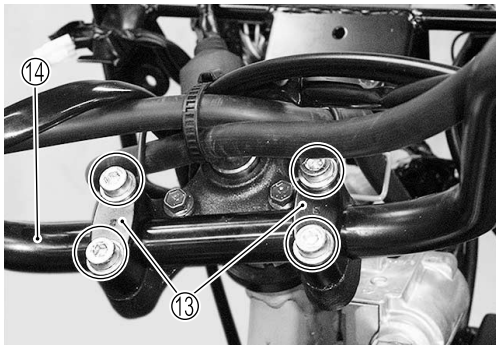

REASSEMBLY

- Reassemble the handlebars in the reverse order of removal.
- Pay attention to the following points:
- Align the mating surface of handlebar holder with punch mark Ⓐ on the handlebars.

- Apply THREAD LOCK to the handlebar clamp bolts.
- Tighten the forward handlebar clamp bolts first temporarily to provide clearance on the rear side and then tighten both the bolts to the specification.

1303 99000-32030: THREAD LOCK SUPER "1303"

Handlebar clamp bolt: 23 N·m (2.3 kgf-m, 16.5 lb-ft)

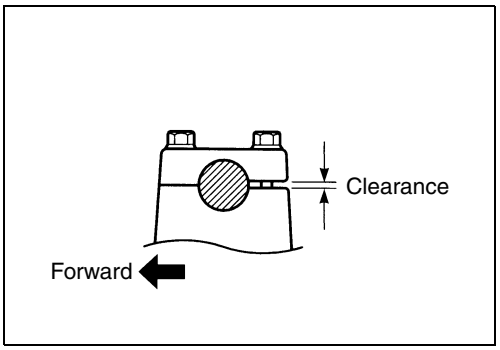

- With the stopper Ⓑ engaged with the handlebar hole Ⓒ, assemble the handlebar switch.

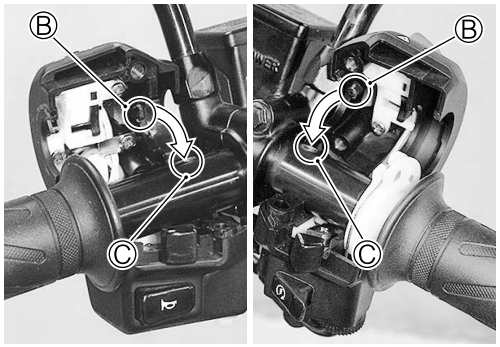

- When remounting the brake master cylinder onto the handlebars, align the master cylinder holder's mating surface with punch mark Ⓓ on the handlebars.
- Tighten the upper bolt first temporarily to provide clearance on the lower side and then tighten both the bolts to the specification.

Master cylinder bolt: 10 N·m (1.0 kgf-m, 7.0 lb-ft)

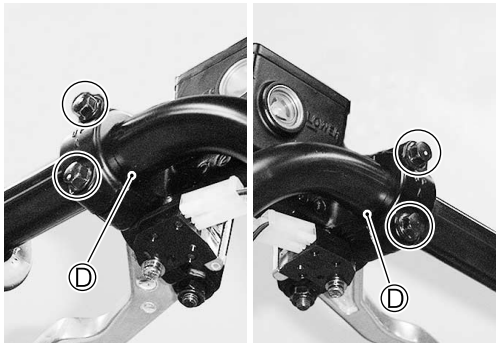

- Perform the following inspections after assembly has been completed.

* Brake (☞2-16)

* Throttle operation and cable play (☞2-12)

FRONT FORK

① Dust seal
② Oil seal stopper ring
③ Oil seal
④ Oil seal retainer
⑤ Guide metal
⑥ Oil lock piece
⑦ Outer tube
⑧ Cylinder
⑨ Rebound spring
⑩ Inner tube
⑪ Slide metal
⑫ Washer
⑬ Front fork spring

Ⓐ Cylinder bolt
Ⓑ Front fork cap bolt

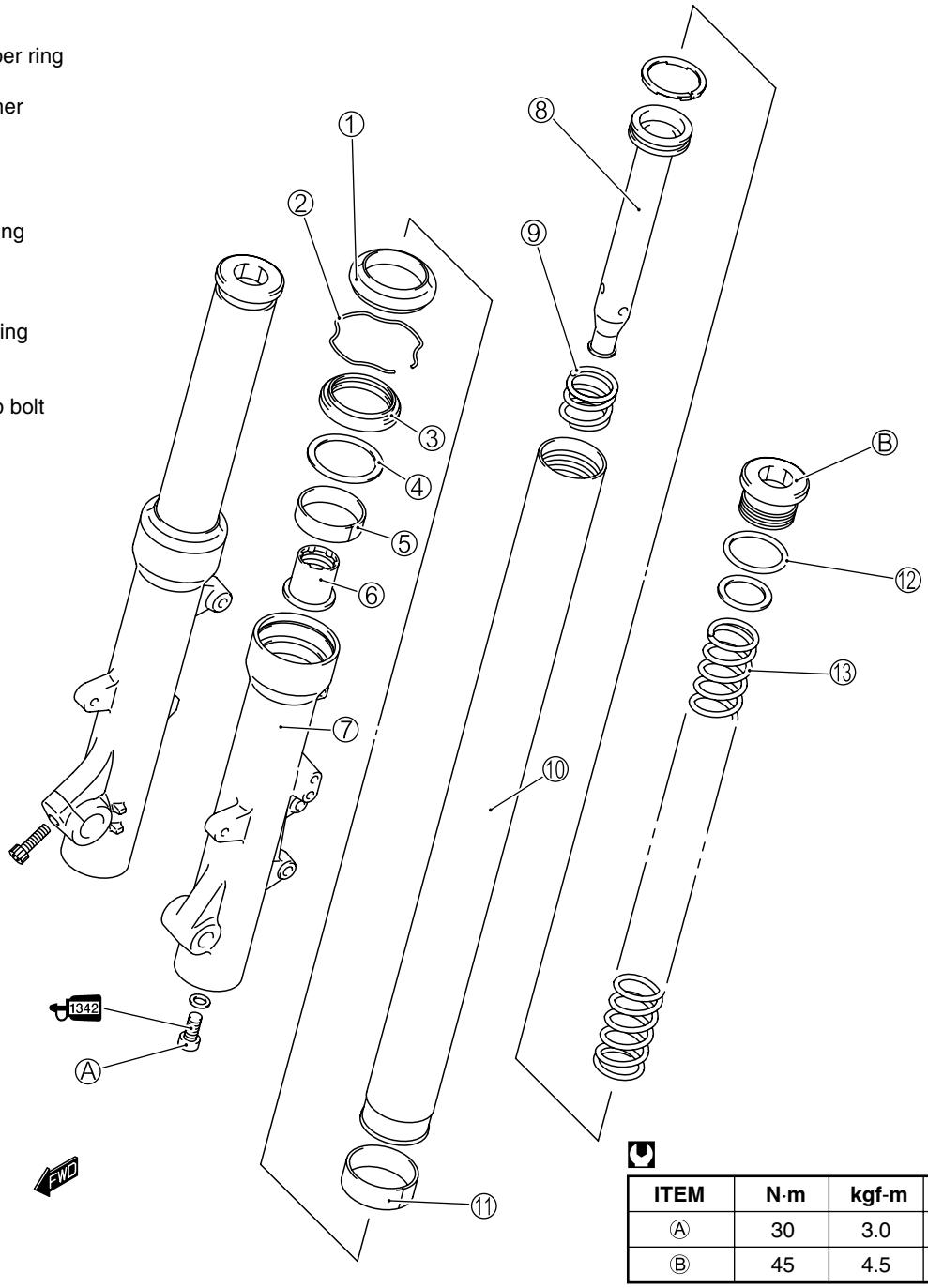

ITEM	N·m	kgf-m	lb-ft
Ⓐ	30	3.0	21.5
Ⓑ	45	4.5	32.5

REMOVAL AND DISASSEMBLY

- Remove the front leg shield. (☞7-12)
- Remove the front wheel. (☞7-20)
- Remove the front brake caliper ① and disconnect the brake hose clamp ②.

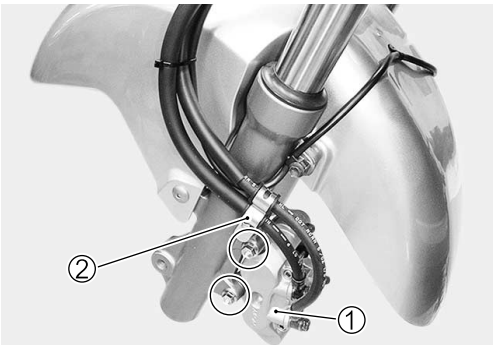

- Remove the nuts and bolts, remove the front fender ①.

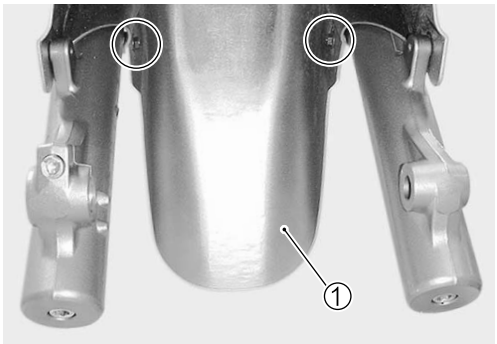

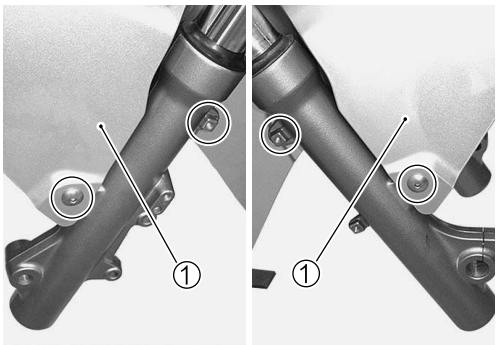

- Remove the front fork cap bolt ② and washer using the special tool.

TOOL 09940-30230: Hexagon socket (17 mm)

CAUTION

Use caution when removing the front fork cap bolt since the spring force is applied to the cap bolt.

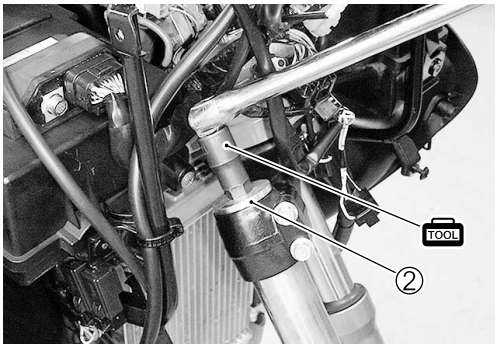

- Loosen the front fork clamp bolts and remove the front fork ③.

- Remove the front fork spring ④ and drain the front fork oil.

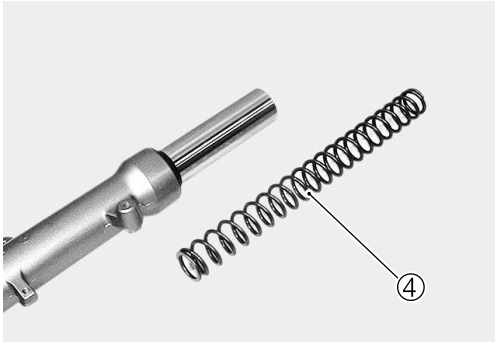

- Remove the cylinder bolt ① using the special tools.

TOOL 09940-34520: "T" Handle
09940-34531: Attachment A

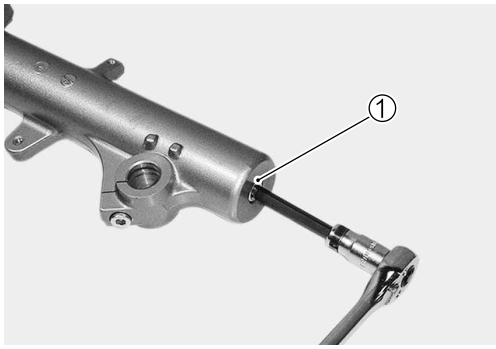

- Remove the cylinder ② and rebound spring ③.

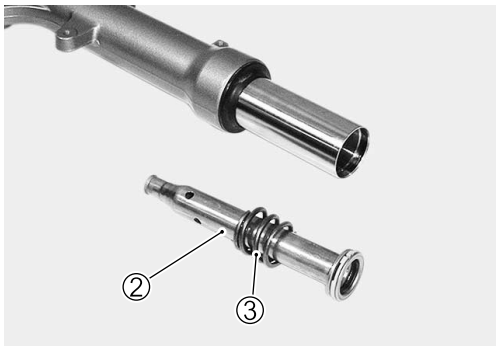

- Remove the dust seal ④ and oil seal stopper ring ⑤.

CAUTION

Be careful not to damage the outer tube.

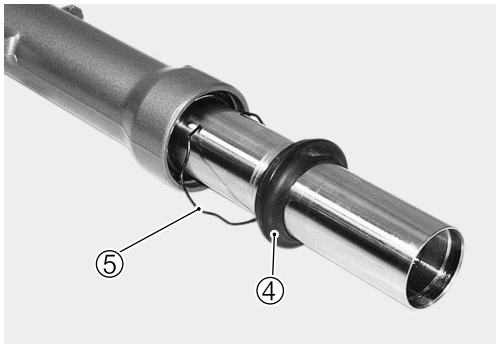

- Pull the inner tube out of the outer tube.

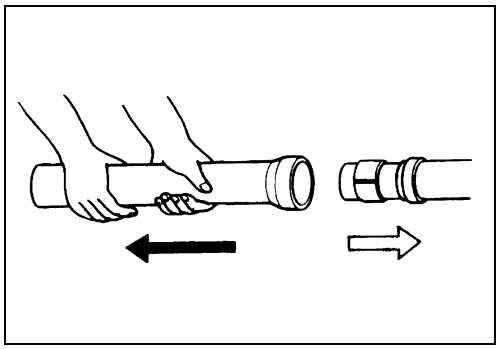

- Remove the oil lock piece ⑥.
- Remove the oil seal ⑦, oil seal retainer ⑧, guide metal ⑨ and slide metal ⑩ from the inner tube.

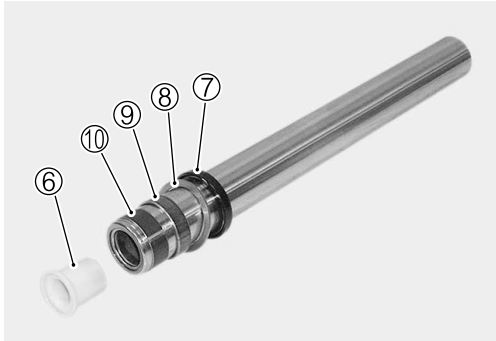

FRONT FORK SPRING INSPECTION

- Measure the free length of the front fork spring.
- If the length is found shorter than the service limit, replace the spring.

DATA **Front fork spring free length:**
Service limit: 324 mm (12.8 in)

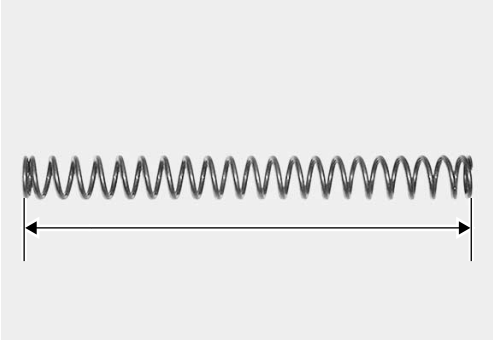

INNER TUBE AND OUTER TUBE INSPECTION

- Inspect the sliding surface of the inner tube, outer tube and cylinder for scratch, wear, bending, or other abnormal condition.

CYLINDER INSPECTION

- Inspect the surface of the cylinder for scratch and wear.
- If any defects are found, replace it with a new one.

REASSEMBLY AND REMOUNTING

- Reassemble and remount the front fork in the reverse order of removal and disassembly.
- Pay attention to the following points:

CAUTION

*** Thoroughly wash all the component parts being assembled.**
Insufficient washing can result in oil leakage or premature wear of the parts.
*** When reassembling the front fork, use new fork oil.**
*** Use the specified fork oil for the front fork.**
*** When reassembling, replace the slide metals, oil seal, dust seal and damper rod bolt gasket with new ones.**
*** Use care not to cause damage to the slide metal surfaces since the surfaces are TEFLON coated.**

- On the inner tube, assemble the following parts.

① Dust seal
② Oil seal stopper ring
③ Oil seal
④ Oil seal retainer
⑤ Guide metal
⑥ Slide metal

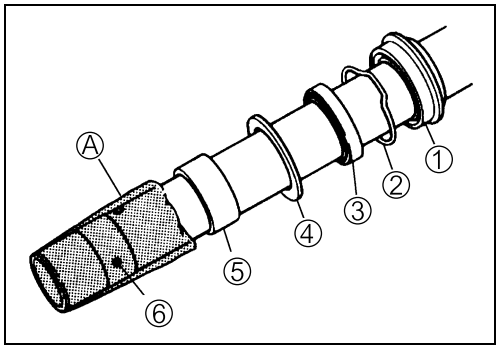

CAUTION

To prevent the lip of oil seal ③ from being damaged, cover the inner tube with vinyl sheet Ⓐ during installation.

- Install the spring to the oil lock piece.

- Install the oil lock piece ① into the inner tube.
- Install the inner tube into the outer tube with care not to drop the oil lock piece out.

NOTE:
After installing the inner tube into the outer tube, keep the oil lock piece into the inner tube by compressing the front fork fully.

- Apply SUZUKI SUPER GREASE to the lip of the oil seal ②.
- Install the oil seal ② into the outer tube using the special tool.

99000-25010: SUZUKI SUPER GREASE "A" (Others)
99000-25030: SUZUKI SUPER GREASE "A" (USA)

09940-52861: Front fork oil seal installer set

CAUTION

Wach clean the front fork oil seal installer before using. If dirt is on the installer, the inner tube may possibly be damaged during press-fitting work.

- Fit the stopper ring ③ and dust seal ④.

CAUTION

Make sure that the stopper ring is securely fitted into the groove on the outer tube.

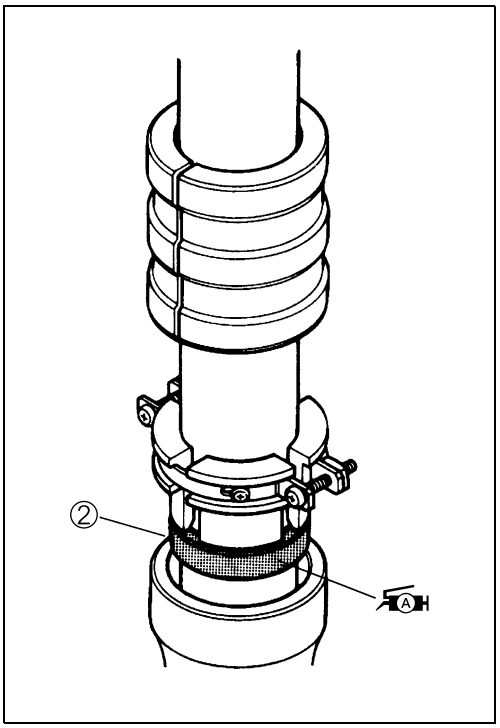

② Oil seal
③ Oil seal stopper ring
④ Dust seal
⑤ Oil seal retainer
⑥ Guide metal

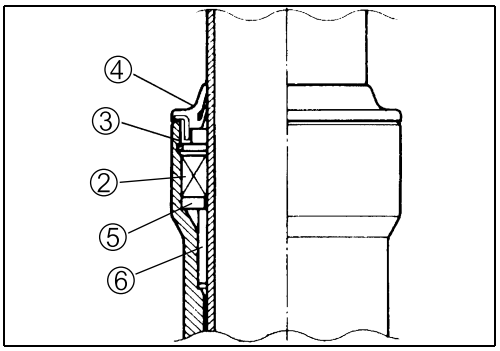

- Install the rebound spring ⑦ on the cylinder ⑧ and install them together to the inner tube.

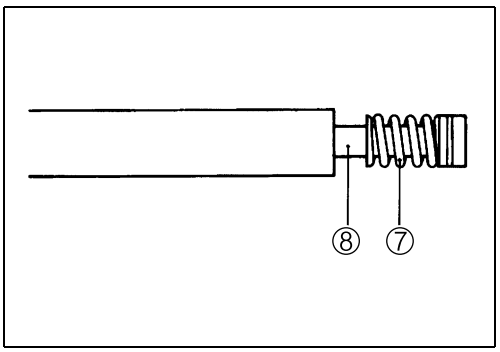

- With the gasket ① fitted, apply the cylinder bolt ②.
- Apply THERD LOCK to the cylinder bolt.

1342 99000-32050: THREAD LOCK "1342"

CAUTION

Replace the gasket with a new one.

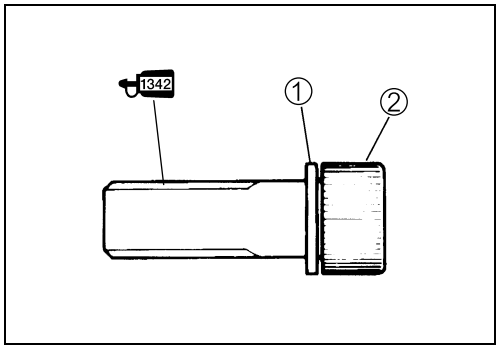

- Tighten the cylinder bolt to the specified torque, using the special tools.

TOOL 09940-34520: "T" Handle
09940-34531: Attachment A

Cylinder bolt: 30 N·m (3.0 kgf-m, 21.5 lb-ft)

- Pour the specified front fork oil into the front fork.

DATA Front fork oil capacity (each leg):
284 ml (9.6/1.00 US/Imp OZ)

FORK 99000-99044-10G: SUZUKI FORK OIL #10

CAUTION

Move the inner tube up and down several strokes until no more bubbles come out from the oil.

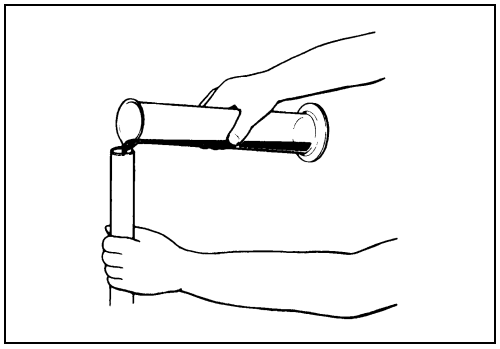

- With the front fork held in vertical position, compress the inner tube all the way.
- Wait until the fluid level stabilizes, measure and adjust the level to specification using the special tool.

DATA Front fork oil level (without spring): 96 mm (3.78 in)

TOOL 09943-74111: Front fork oil level gauge

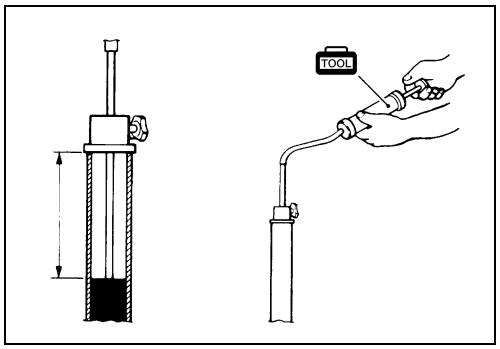

- Install the front fork spring ③.

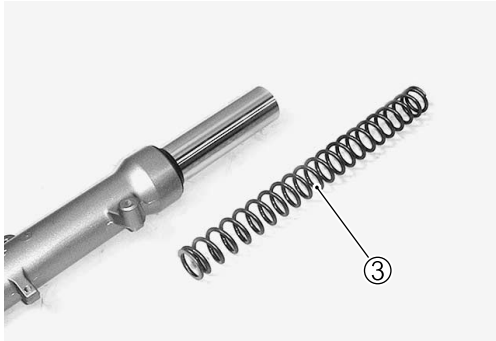

- Install the O-ring to the front fork cap bolt and apply fork oil.

FORK 99000-99044-10G: SUZUKI FORK OIL #10

CAUTION

Replace the O-ring with a new one.

- Insert the front fork inner tube top end into the steering stem all the way until the step of mounting hole has been contacted.
- Tighten the clamp bolts temporarily.

- Install the washer and temporarily tighten the front fork cap bolt.
- Tighten the front fork clamp bolts ① to the specified torque.

Front fork clamp bolt :23 N·m (2.3 kgf-m, 16.5 lb-ft)

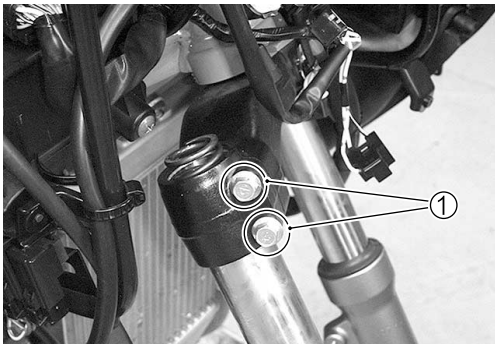

- Tighten the front fork cap bolt ② to the specified torque, using the special tool.

TOOL 09940-30230: Hexagon socket (17 mm)

Front fork cap bolt: 45 N·m (4.5 kgf-m, 32.5 lb-ft)

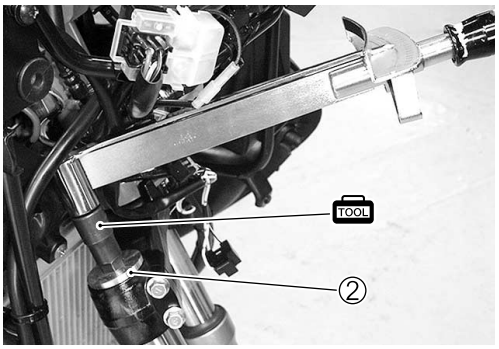

- Perform the following inspections after assembly has been completed.

* Front fork (☞2-21)

* Speedometer lead wire routing (☞9-20)

STEERING

① Steering stem
② Washer
③ Steering stem nut
④ Dust cover
⑤ Upper inner race
⑥ Upper bearing
⑦ Lower bearing

Ⓐ Handlebar holder clamp bolt
Ⓑ Handlebar holder set bolt
Ⓒ Lock nut
Ⓓ Handlebar clamp bolt

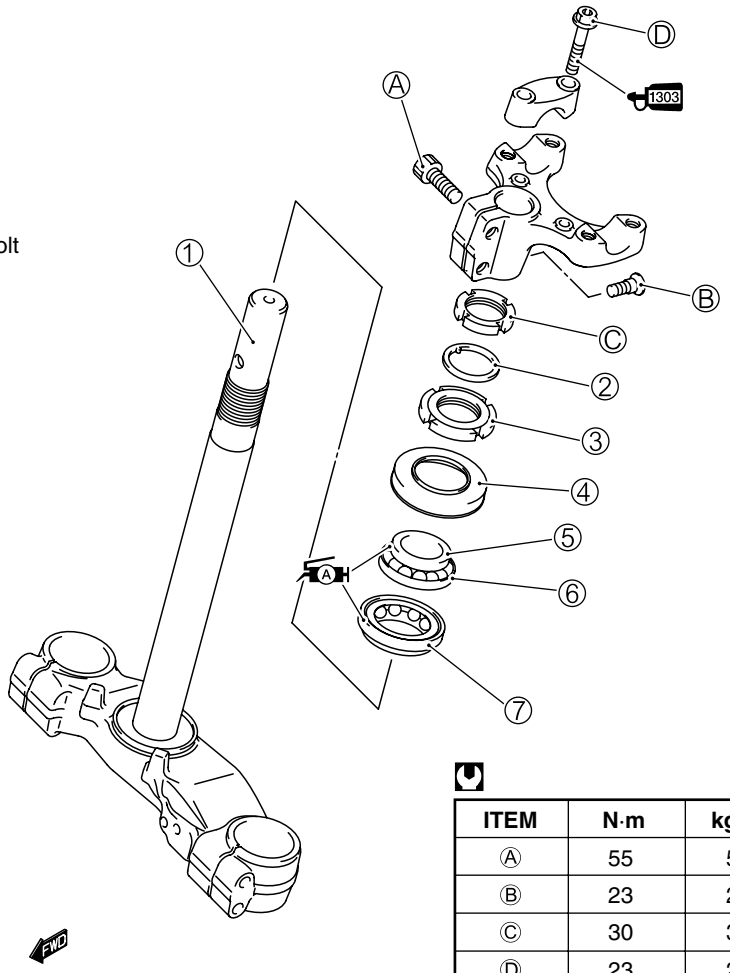

ITEM	N·m	kgf-m	lb-ft
Ⓐ	55	5.5	40.0
Ⓑ	23	2.3	16.5
Ⓒ	30	3.0	21.5
Ⓓ	23	2.3	16.5

REMOVAL AND DISASSEMBLY

- Remove the front box. (☞7-14)
- Remove the front fork. (☞7-35)

NOTE:
The front fork removal is not necessary unless the steering stem replacement or front fork disassembly work is requied.

- Remove the front brake hose clamp bolts ①.
- Remove the clamp ② and cable guide ③.

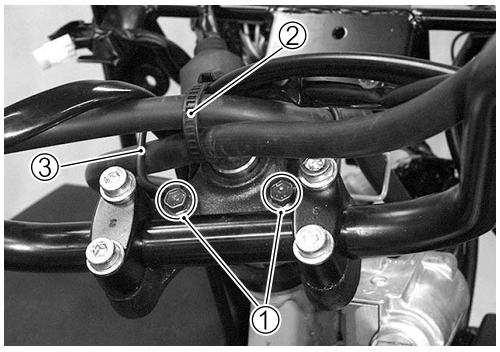

- Loosen the handlebar holder clamp bolts ①.

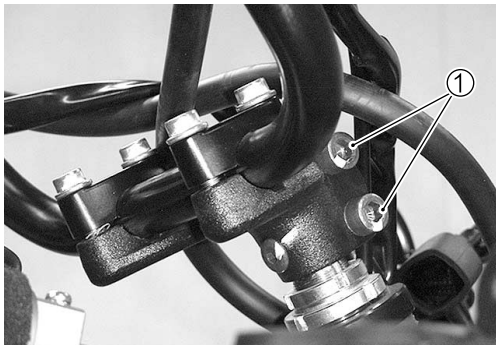

- Remove the handlebar holder set bolt ②.
- Remove the handlebar holder with handlebars.

CAUTION

This operation must be performed without causing undue stress to the brake hose and wire.

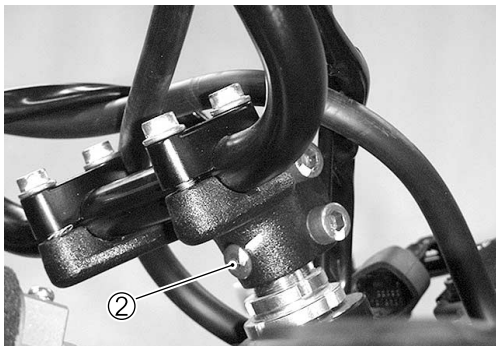

- Remove the lock nut ③, washer ④ and steering stem nut ⑤ using the special tools and draw out the steering stem.

TOOL 09940-14911: Steering socket wrench
09940-11420: Steering stem nut socket
09940-11430: Steering stem nut socket

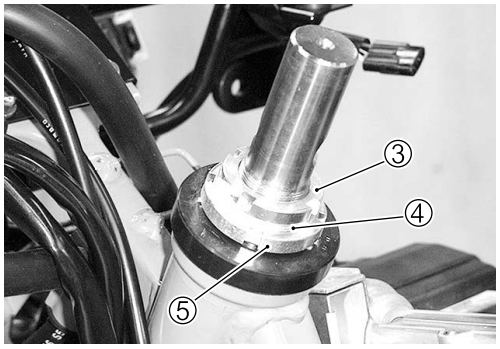

- Remove the dust cover ⑥, upper inner race ⑦ and upper bearing ⑧.

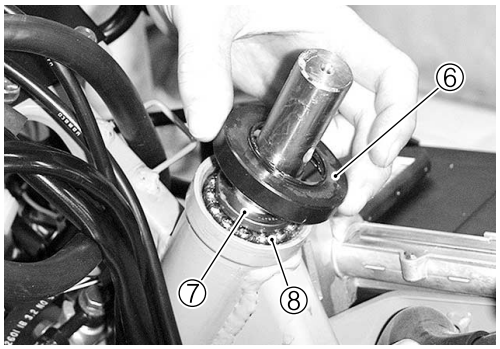

- Remove the lower bearing ⑨.

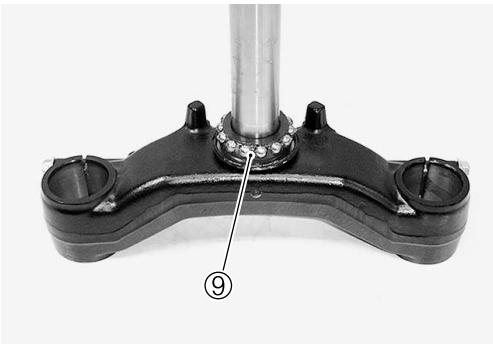

- Remove the lower inner race using a chisel like, plain head steel rod.

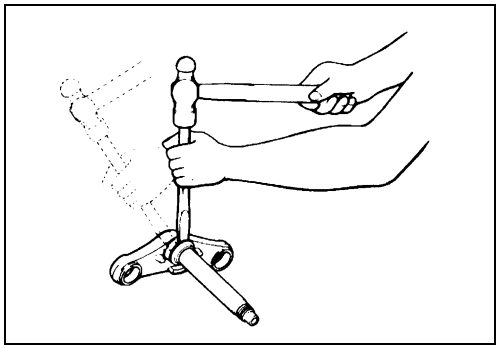

CAUTION

> *** Unless corrosion, damage or other abnormal condition is found, the bearing race need not be replaced.**
> *** Once the lower inner race has been removed, replace it with a new one.**

- Drive out the steering stem bearing outer races using the special tools ① and ②.

TOOL 09941-54911: ① Bearing outer race remover
09941-74910: ② Steering bearing installer

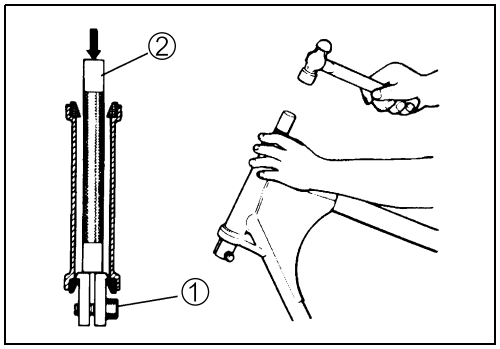

INSPECTION

- Inspect the steering stem and steering stem head for any damage.
- Inspect the bearing and race for corrosion, nick or other damage.

REASSEMBLY AND REMOUNTING

- Reassemble and remount the steering in the reverse order of removal and disassembly.
- Pay attention to the following points:

- Press in the upper and lower outer race using the special tool.

TOOL 09941-34513: Steering race installer

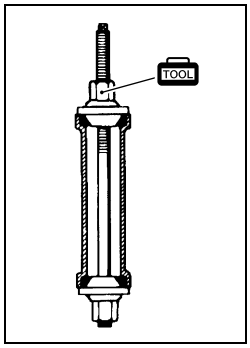

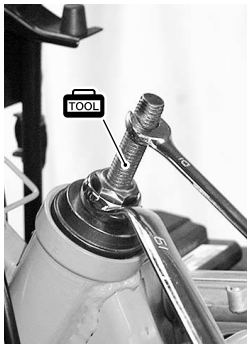

- Press in the lower inner race ① using the special tool.

09925-18011: Bearing installer

- Apply SUZUKI SUPER GREASE to the upper bearing, lower bearing and outer races.

99000-25010: SUZUKI SUPER GREASE "A" (Others)
99000-25030: SUZUKI SUPER GREASE "A" (USA)

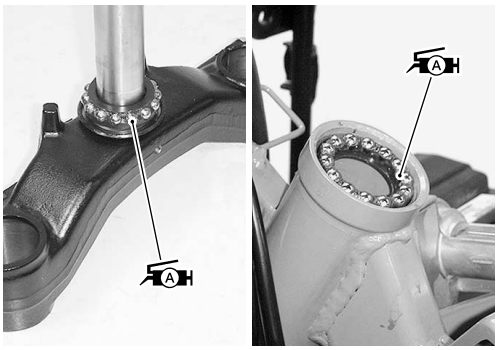

- Tighten the steering stem nut ② to the specified torque using the special tools.

09940-14911: Steering socket wrench
09940-11430: Steering stem nut socket

Steering stem nut: 30 N·m (3.0 kgf-m, 21.5 lb-ft)

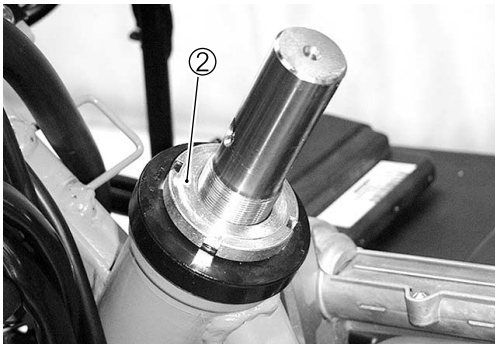

- Turn the steering stem right and left 5-6 times to break-in the bearing.
- Return the steering stem nut ③ by 1/4 to 1/2 of a turn.
- In this condition, check that the steering stem can turn smoothly with no rattle and stiffness.
- If there is a rattle or heavy movement, adjust the tightness by the stem nut.

- Fit the washer with its tab Ⓐ engaged with the steering stem groove.

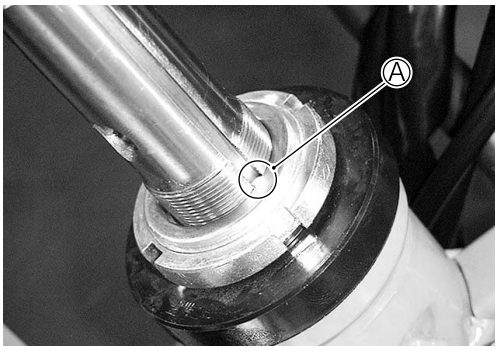

- Tighten the lock nut to the specified torque, using the special tools.

TOOL 09940-14911: Steering socket wrench
09940-11420: Steering stem nut socket

Lock-nut: 30 N·m (3.0 kgf-m, 21.5 lb-ft)

NOTE:
Tightening the lock nut can affect the steering stem nut adjustment. Therefore after tightening the lock nut, check the steering movement again and adjust if necessary.

- Tighten the handlebar holder set bolt ① to the specified torque.

Handlebar holder set bolt: 23 N·m (2.3 kgf-m, 16.5 lb-ft)

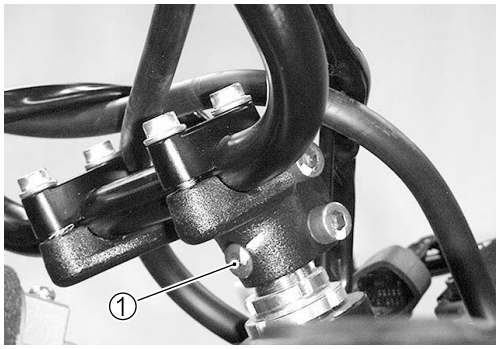

- Tighten the handlebar holder clamp bolts ② to the specified torque.

Handlebar holder clamp bolt: 55 N·m (5.5 kgf-m, 40.0 lb-ft)

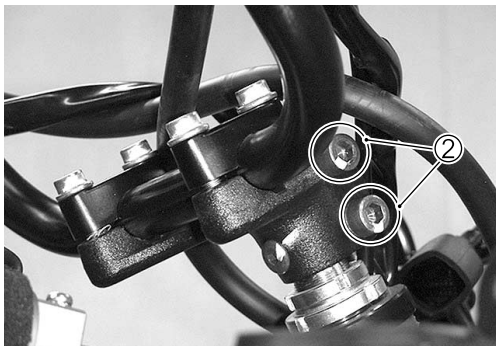

- Perform the steering inspection after assembly has been completed. (☞2-20)

REAR WHEEL

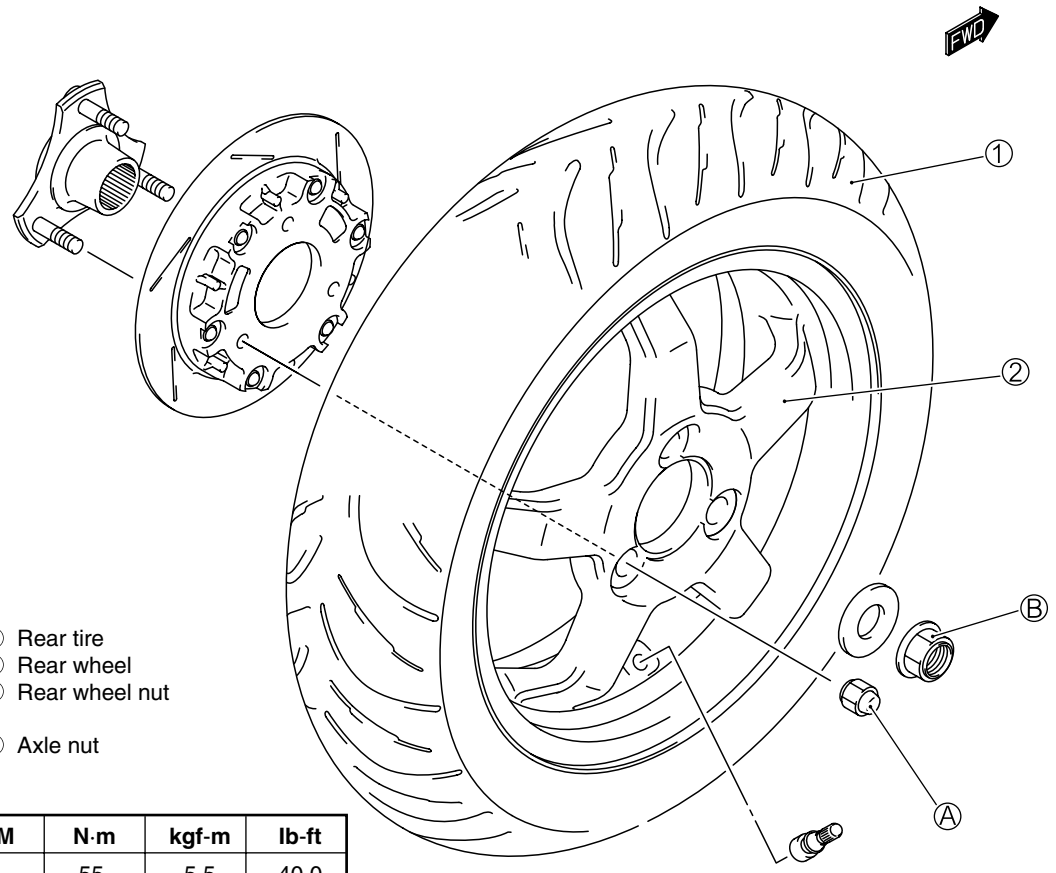

① Rear tire
② Rear wheel
③ Rear wheel nut

Ⓐ Axle nut

ITEM	N·m	kgf-m	lb-ft
Ⓐ	55	5.5	40.0
Ⓑ	23	2.3	16.5

REMOVAL

- Remove the under cover.
- Remove the exhaust pipe joint nut.

- Remove the muffler ①.

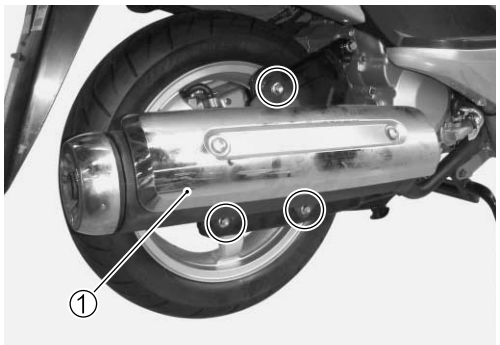

- Remove the muffler bracket ②.

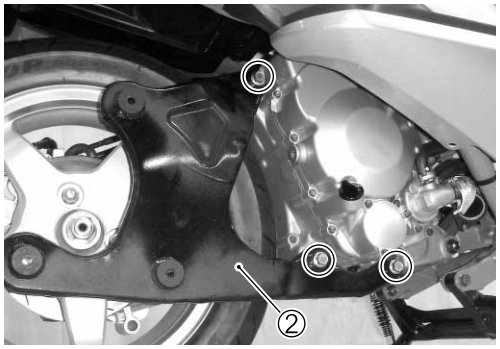

- Remove the rear wheel nuts ③ and remove the wheel ④.

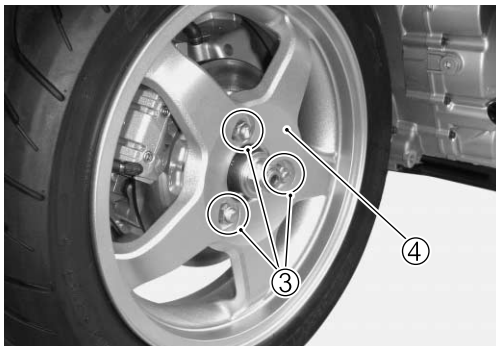

INSPECTION

TIRE

- For inspection of tire. (☞7-78)

REAR WHEEL

- Turn the rear wheel with the brake caliper removed and measure runout using a dial gauge.
- If the runout measured exceeds the service limit, overhaul the rear axle and check for the cause. (☞3-18, 71)

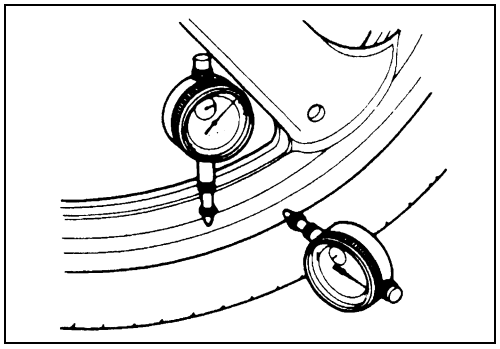

DATA Rear wheel runout (Radial and Axial):
Service Limit: 2.0 mm (0.08 in)

REMOUNTING

- Remount the rear wheel in the reverse order of removal.
- Pay attention to the following points:

- Install the rear wheel and tighten the rear wheel nuts ① to the specified torque.

Rear wheel nut: 50 N·m (5.0 kgf-m, 36.0 lb-ft)

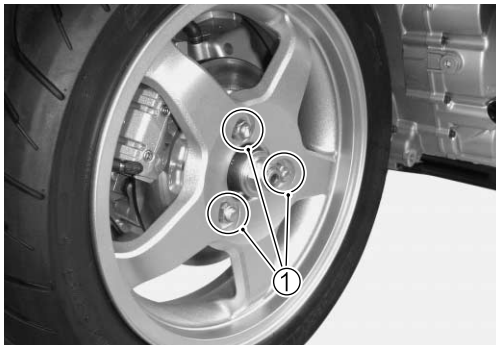

- Tighten the muffler bracket bolts ② to the specified torque.

Muffler bracket bolt: 50 N·m (5.0 kgf-m, 36.0 lb-ft)

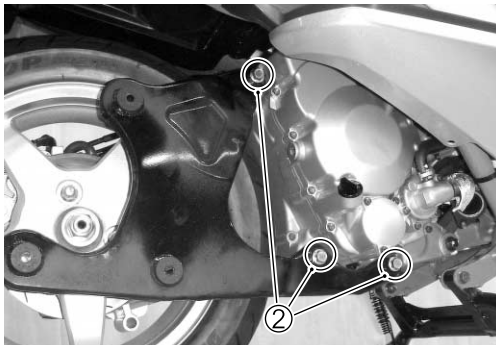

- Insert the bolts from the muffler side and assemble the muffler ③, muffler bracket ④, washers and muffler mounting nuts in that order.
- Tighten the muffler mounting nuts to the specified torque.

Muffler mounting nut: 23 N·m (2.3 kgf-m, 16.5 lb-ft)

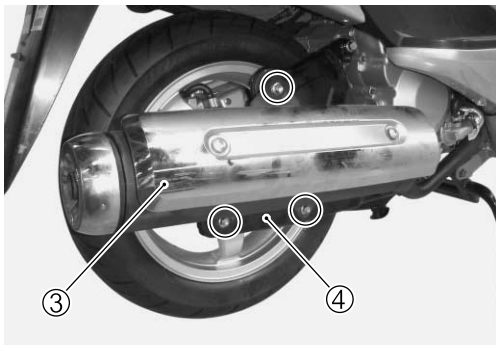

- Tighten the exhaust pipe joint nuts to the specified torque.

Exhaust pipe joint nut: 23 N·m (2.3 kgf-m, 16.5-ft)

REAR BRAKE

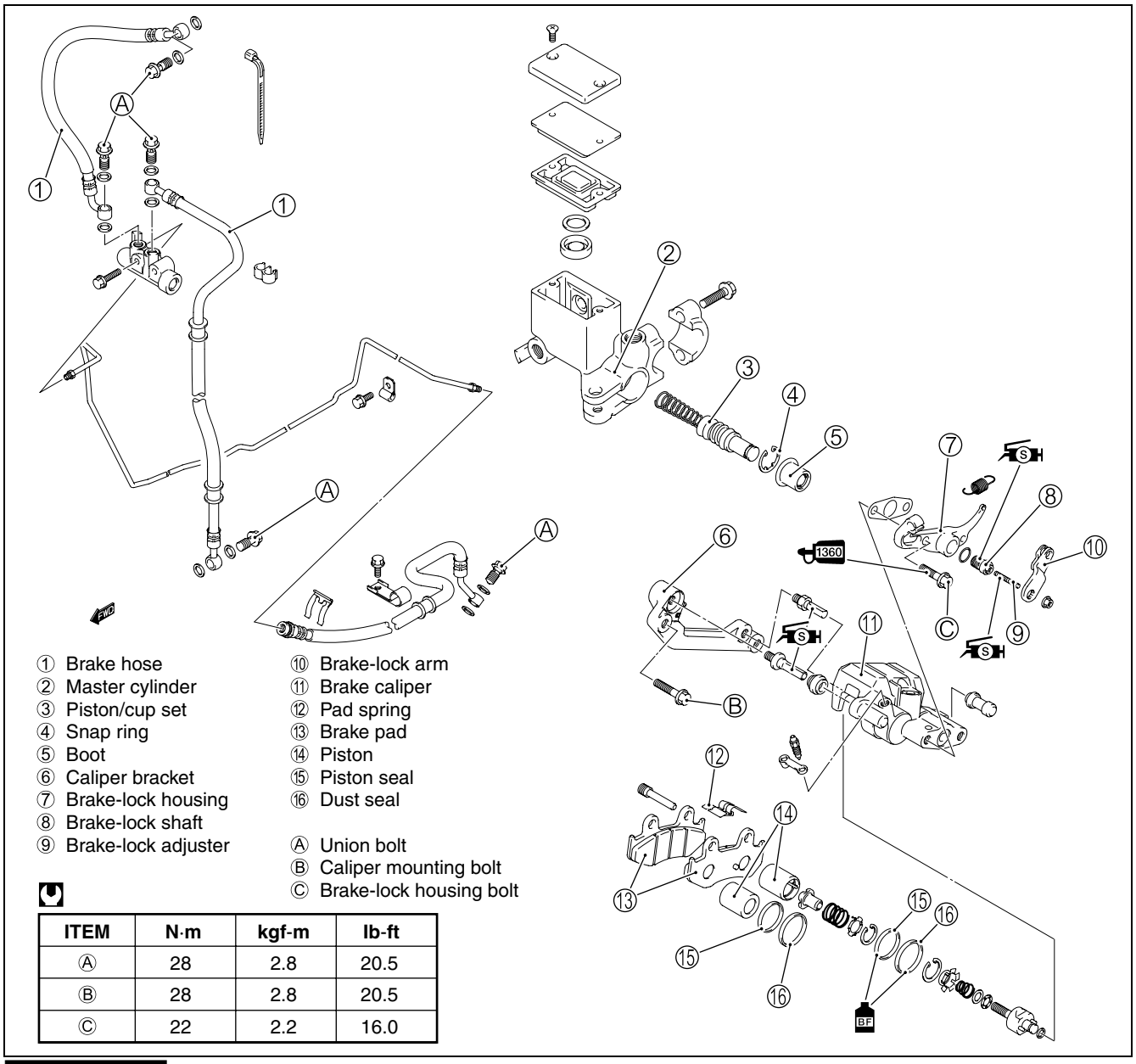

① Brake hose
② Master cylinder
③ Piston/cup set
④ Snap ring
⑤ Boot
⑥ Caliper bracket
⑦ Brake-lock housing
⑧ Brake-lock shaft
⑨ Brake-lock adjuster
⑩ Brake-lock arm
⑪ Brake caliper
⑫ Pad spring
⑬ Brake pad
⑭ Piston
⑮ Piston seal
⑯ Dust seal

Ⓐ Union bolt
Ⓑ Caliper mounting bolt
Ⓒ Brake-lock housing bolt

ITEM	N·m	kgf-m	lb-ft
Ⓐ	28	2.8	20.5
Ⓑ	28	2.8	20.5
Ⓒ	22	2.2	16.0

⚠ WARNING

- **This brake system is filled with an ethylene glycol-based DOT 4 brake fluid. Do not use mix different types of fluid such as silicone-based or petroleum-based.**
- **Do not use any brake fluid taken from old, used or unsealed containers. Never reuse brake fluid left over from the last servicing or stored for long periods.**
- **When storing the brake fluid, seal the container completely and keep away from children.**
- **When replenishing brake fluid, take care not to get dust into fluid.**
- **When washing brake components, use fresh brake fluid. Never use cleaning solvent.**
- **A contaminated brake disc or brake pad reduces braking performance. Discard contaminated pads and clean the disc with high quality brake cleaner or neutral detergent.**

CAUTION

Handle brake fluid with care: the fluid reacts chemically with paint, plastics, rubber materials etc. and will damage then severly.

BRAKE PAD REPLACEMENT

- Remove the rear wheel. (☞7-48)
- Remove the rear brake caliper cover ①.

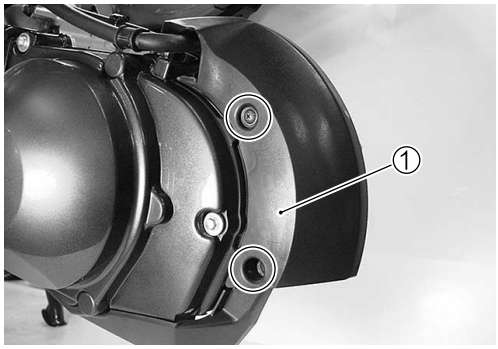

- Remove the caliper mounting bolts.

Caliper mounting bolt: 25 N·m (2.5 kgf-m, 18.0 lb-ft)

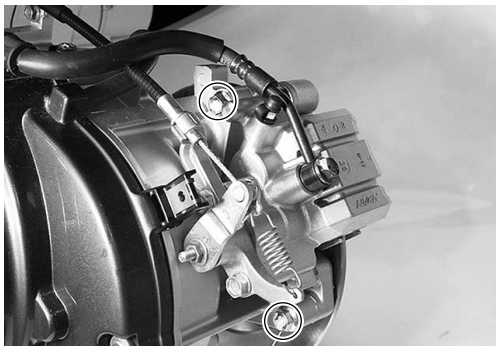

- Remove the pad mounting pins ② and remove the brake pad ③.

CAUTION

When tightening the caliper mounting bolts, make sure that the brake disc is slid on the axle all the way to the end.

Pad mounting pin: 18 N·m (1.8 kgf-m, 13.0 lb-ft)

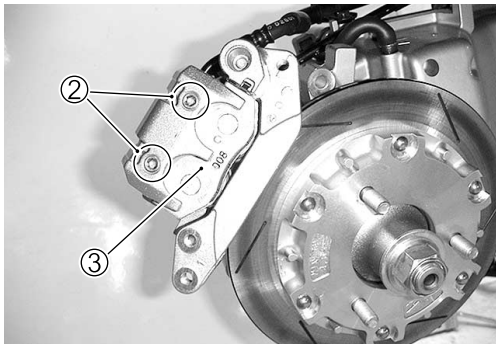

- Push and return the front piston ④ to the caliper.
- Push and return the rear piston ⑤ with turning clockwise to the caliper.

NOTE:
Keep back the front caliper piston ④ not to be push out when installing the rear caliper piston ⑤.

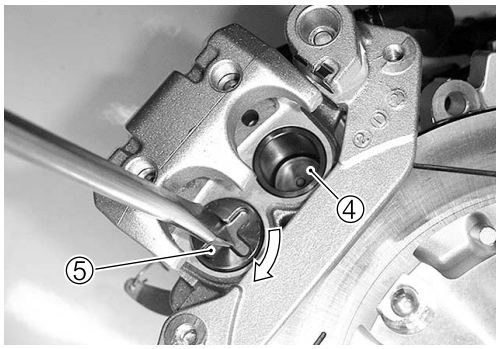

- Set the cross groove of caliper piston in the position as shown in right photograph and install the new brake pads.

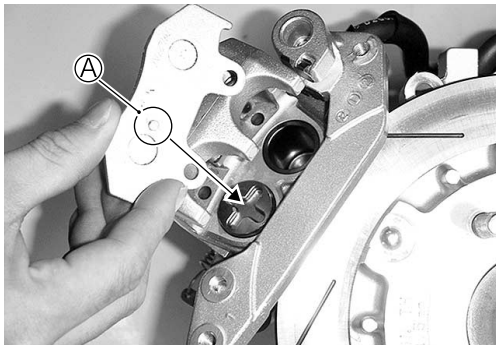

⚠ WARNING

Make sure that the convex Ⓐ of brake pad fits into the groove of caliper piston securely.

NOTE:
Oparate the combination brake lever several times so as to make the brake-lock auto adjuster working after rear wheel reassmbly.

- Perform the following inspections after the rear wheel assembly has been completed.

* Brake (☞2-16)
* Inspection for brake-lock (☞2-28)

CALIPER REMOVAL AND DISASSEMBLY

CAUTION

Do not allow brake fluid to contact the paint surface, plastic or rubber parts, or its chemical reaction can cause discoloration or crack.

- Drain brake fluid from the combination brake reservoir. (☞2-18)
- Remove the rear wheel. (☞7-48)
- Remove the rear brak caliper cover ①.

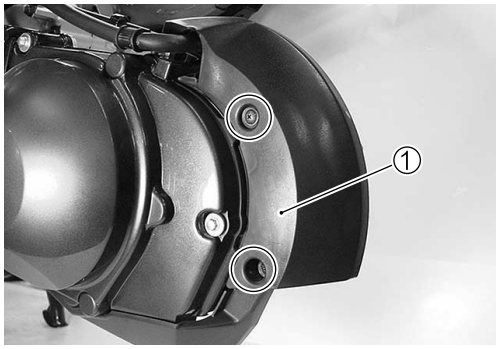

- Remove the brake hose union bolt and caliper mounting bolts.
- With the brake-lock cable ② disconnected, detach the brake caliper ③.

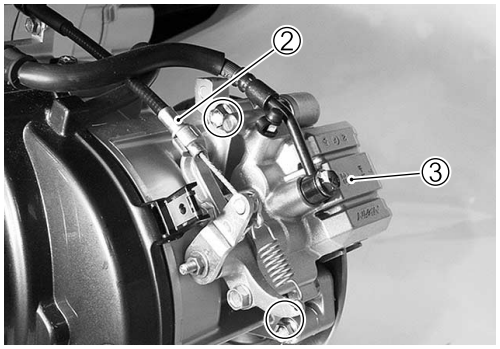

- Remove the brake pads. (☞7-52)
- Remove the caliper bracket ④ and pad spring ⑤.

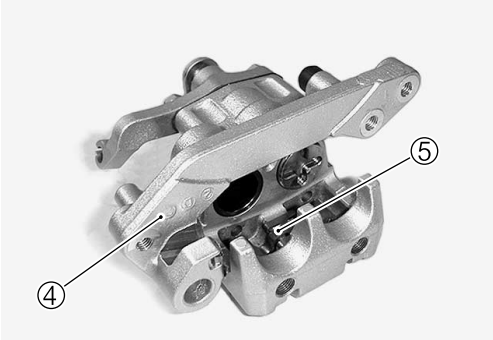

- Place a rag over the piston to prevent it from popping out and then force out the piston using compressed air.

CAUTION

Do not use high pressure air to prevent piston damage.

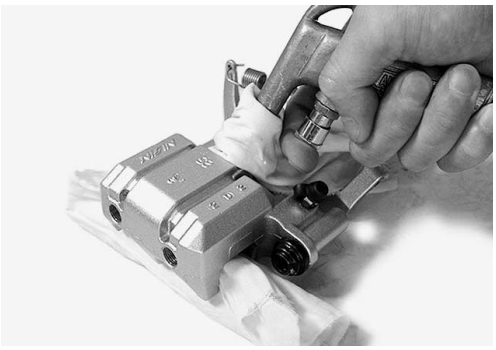

- Remove the rear piston ⑥ with turning counterclockwise.

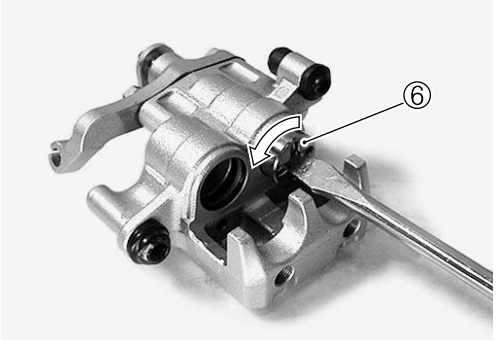

- Remove the dust seals ⑦ and piston seals ⑧ from the cylinder.

CAUTION

*** Use care not to cause scratch on the cylinder bore.**
*** Do not reuse the piston seal and dust seal that have been removed.**

- Remove the brake-lock housing bolts and remove the brake lock housing ⑨.

- Remove the lock nut ⑩, brake-lock adjuster ⑪, brake lock arm ⑫ and brake-lock shaft ⑬.

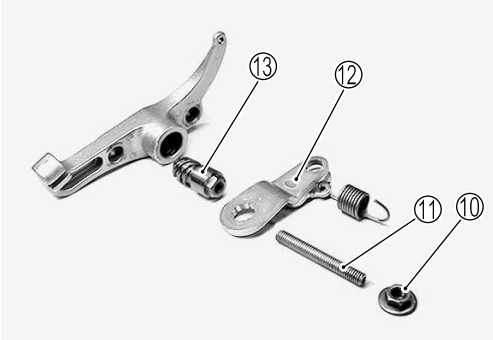

CALIPER INSPECTION

- Inspect the brake fluid leakage from O-ring ① and cup ②.
- If any damage is found, replace the rear brake caliper with a new one.

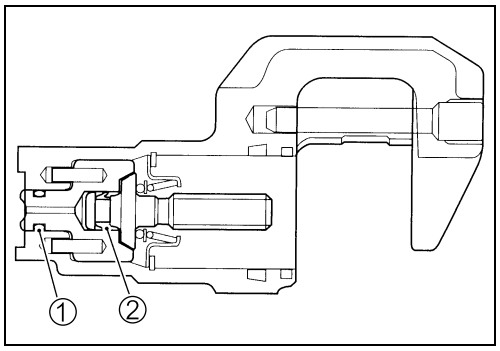

- Inspect the brake caliper cylinder walls and caliper pistons surface for nicks, scratches and other damage.
- If any damage is found, replace the rear brake caliper with a new one.

CALIPER REASSEMBLY AND REMOUNTING

- Reassemble and remount the brake caliper in the reverse order of removal and disassembly.
- Pay attention to the following points:
- Install the new gasket ①.

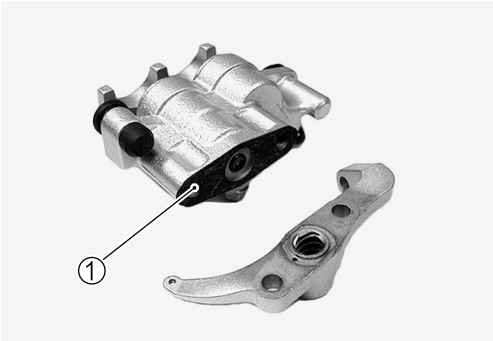

- Apply THREAD LOCK to the brake-lock housing bolts ② and tighten them to the specified torque.

1360 99000-32130: THREAD LOCK SUPER "1360"

Brake-lock housing bolt: 23 N·m (2.3 kgf-m, 16.5 lb-ft)

- Apply SUZUKI SILICONE GREASE to the brake-lock shaft ③ and O-ring ④.

99000-25100: SUZUKI SILICONE GREASE

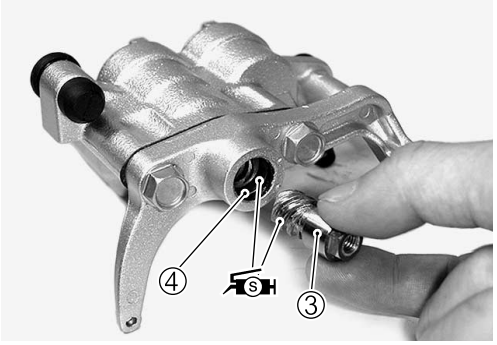

- Install the brake-lock shaft ⑤ so as the punch mark Ⓐ may position between both notch Ⓑ of housing when tightening (turning counterclockwise) the brake-lock shaft.

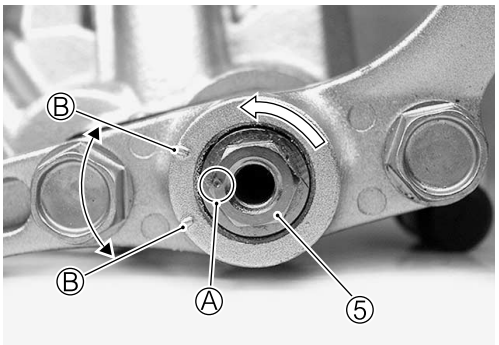

- Align the punch mark Ⓒ on the brake-lock shaft with the punch mark Ⓓ on the brake-lock arm.

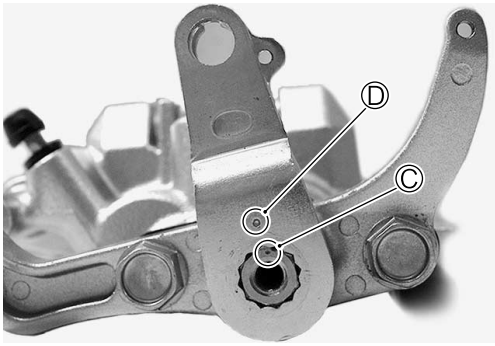

- Apply SUZUKI SILICONE GREASE to the tip and thread of brake-lock adjuster, assemble the lock-nut and spring temporarily.

99000-25100: SUZUKI SILICONE GREASE

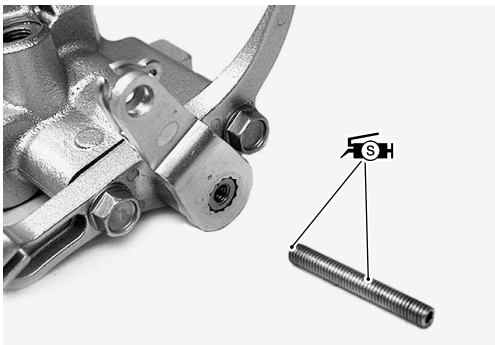

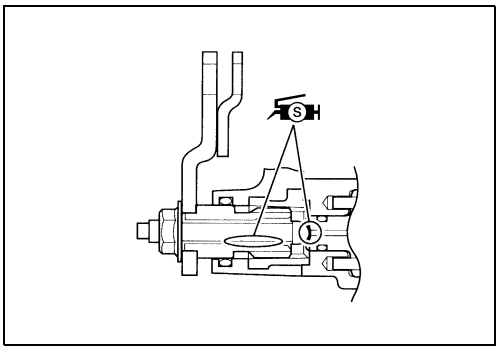

CAUTION

* **Wash the caliper components with fresh brake fluid before reassembly. Do not wipe off brake fluid after washing the components.**
* **Replace the piston seal and dust seal with new ones with brake fluid applied.**

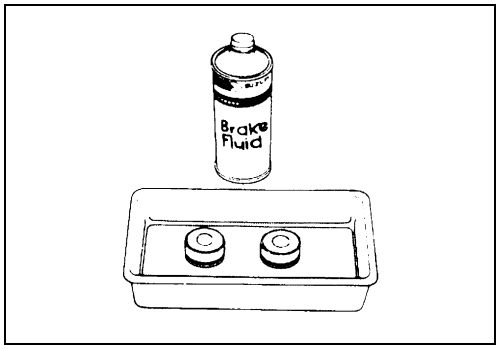

Specification and classification: DOT 4

- Install the piston seal ⑥ and dust seal ⑦ as shown in the illustration.

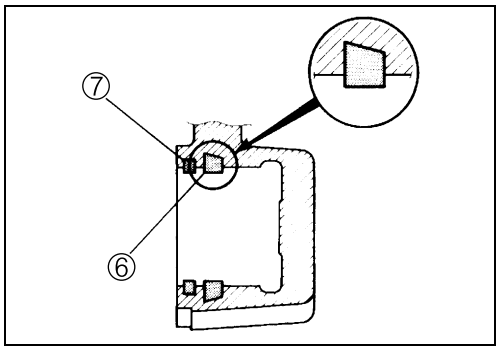

- Set back the rear caliper piston ⑧ into the caliper with turning clockwise.

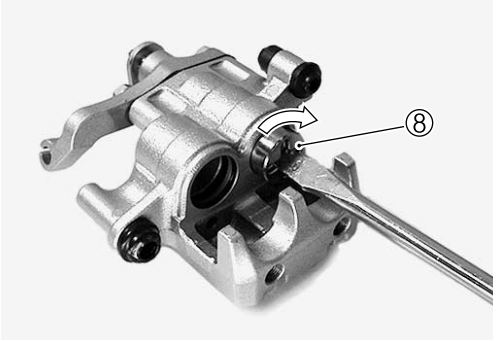

- Apply SUZUKI SILICONE GREASE to the caliper axles ⑨.

99000-25100: SUZUKI SILICONE GREASE

- Install the pad spring.
- Install the brake pad. (☞7-52)

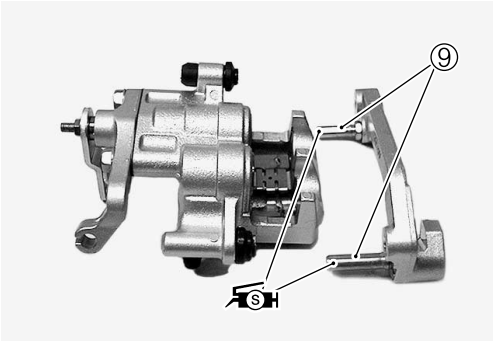

- Install the brake-lock cable ⑩.
- Tighten the caliper mounting bolts to the specified torque.

Caliper mounting bolt: 25 N·m (2.5 kgf-m, 18.0 lb-ft)

- Tighten the union bolt to the specified torque.

Union bolt: 23 N·m (2.3 kgf-m, 16.5 lb-ft)

CAUTION

When tightening the caliper mounting bolts, make sure that the brake disk is slid on the axle all the way to the end.

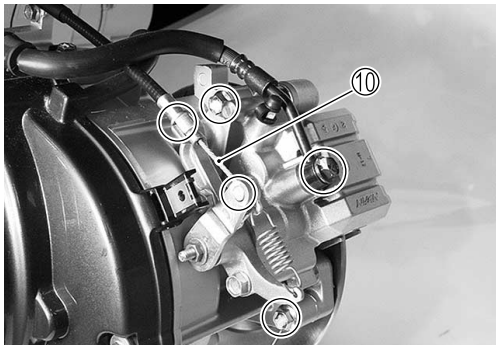

- Perform the following inspections after the caliper assembly has been completed.

* Adjustment of brake-lock cable (☞2-28)
* Brake inspection (☞2-16)
* Replacing brake fluid (☞2-18)

BRAKE DISC REMOVAL

- Remove the rear wheel. (☞7-48)
- Remove the rear brake caliper cover ①.

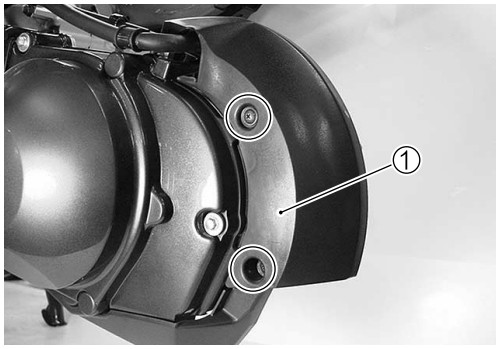

- Remove the caliper mounting bolts and remove the caliper ②.

NOTE:
Hold the caliper so as not to cause undue stress on the brake hose.

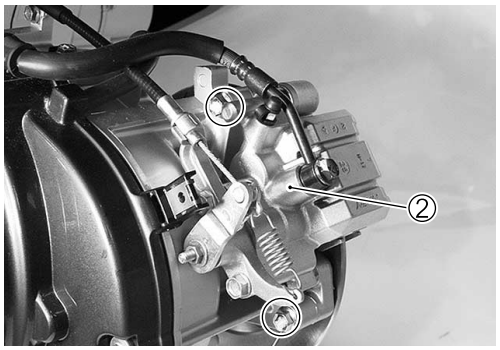

- Remove the brake disc ③ from the rear hub ④.

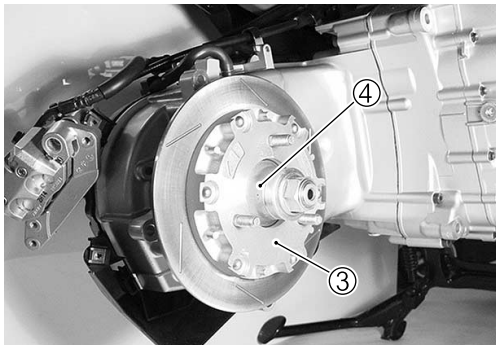

BRAKE DISC INSPECTION

- Check the brake disc surface for scratch, crack or abnormal wear.
- Measure the disc thickness at several positions using a micrometer.
- If the measurement is less than the service limit or any abnormal condition is noted, replace the disc with a new one.

DATA Brake disc thickness: Service Limit: 4.5 mm (0.18 in)

TOOL 09900-20205: Micrometer (0 – 25 mm)

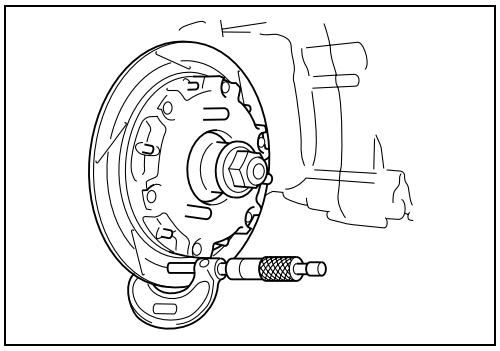

- Secure the brake disc by fitting an appropriate nut to the wheel bolt.
- Measure the runout with a dial gauge.
- Replace the disc if the runout exceeds the service limit.

DATA Brake disc runout: Service Limit: 0.30 mm (0.012 in)

TOOL 09900-20607: Dial gauge (1/100 mm)
09900-20701: Magnetic stand

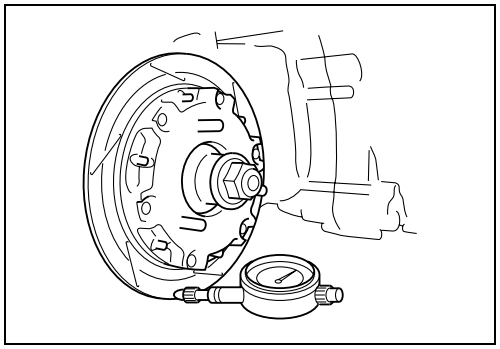

BRAKE DISC REASSEMBLY

- Reassemble the brake disc in the reverse order of removal.
- Pay attention to the following points:
- Install the brake disk ① to the rear hub ②.
- Tighten the caliper mounting bolts to the specified torque.

CAUTION

When tightening the caliper mounting bolts, make sure that the brake disc is slid on the rear hub all the way to the end.

Caliper mounting bolt: 25 N·m (2.5 kgf-m, 18.0 lb-ft)

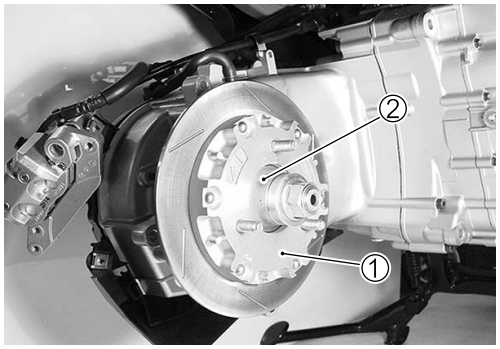

MASTER CYLINDER REMOVAL AND DISASSEMBLY

- Remove the handle cover. (☞7-11)
- Remove the rear view mirror ①.
- Drain brake fluid from the combination brake reservoir. (☞2-18)
- Disconnect the brake light switch lead wires.

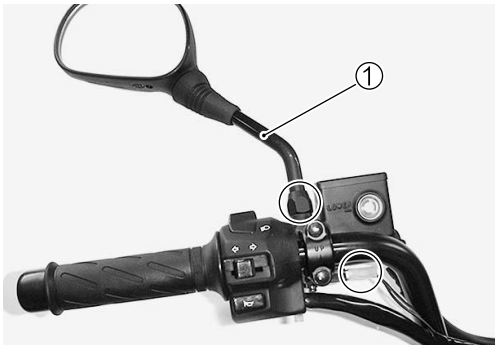

- Remove the union bolt ②.

CAUTION

Place a rag under the union bolt so that brake fluid may not contact the parts.

- Remove the master cylinder ③.

- Remove the brake light switch ④ and brake lever ⑤.

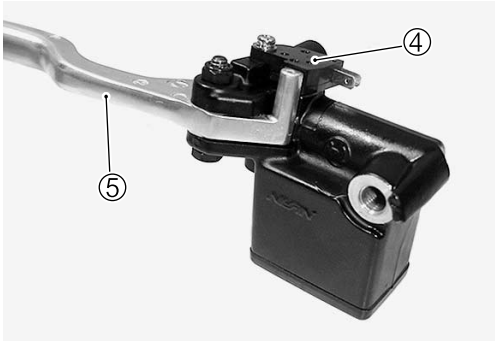

- Remove the boot ⑥ and remove the snap ring ⑦.
- Remove the piston/cup set ⑧ and spring ⑨.

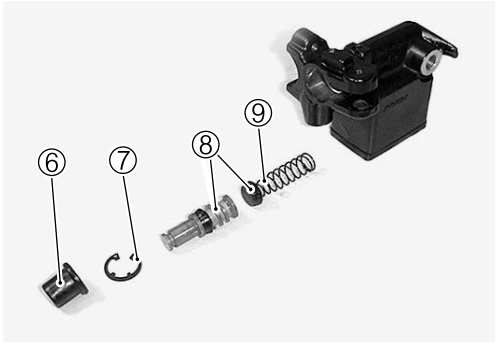

MASTER CYLINDER INSPECTION

- Wash clean the inside of master cylinder and the reservoir tank with fresh brake fluid.

Specification and classification: DOT 4

- Inspect the cylinder wall, piston/cup set and spring for scratch, corrosion or other damages.
- If any abnormal condition is noted, replace the inner parts or master cylinder.

MASTER CYLINDER REASSEMBLY AND REMOUNTING

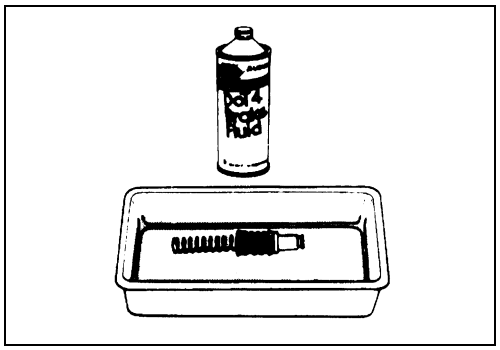

- Reassemble and remount the master cylinder in the reverse order of removal and dissassembly.
- Pay attention to the following points:

CAUTION

*** Wash each component with fresh brake fluid before reassembly. Do not wipe off brake fluid after washing the components.**
*** Replace the cup set (piston, primary cup, secondary cup and spring) with a new one with brake fluid applied.**

- Install the master cylinder ①. (☞7-31)
- Tighten the upper bolt first temporarily to provide clearance on the lower side and then tighten both the bolts to the specification.

Master cylinder bolt: 10 N·m (1.0 kgf-m, 7.0 lb-ft)

- Install the brake hose and tighten the union bolt to the specified torque. (☞9-23)

Union bolt: 23 N·m (2.3 kgf-m, 16.5 lb-ft)

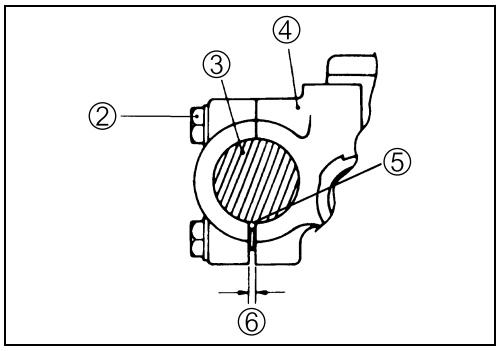

② Master cylinder bolt
③ Handlebars
④ Master cylinder
⑤ Punch mark
⑥ Clearance

- Fill the system with brake fluid and bleed air. (☞2-20)

- Perform the following inspections after the master cylinder assembly has been completed.

* Brake (☞2-16)

DELAY VALVE REMOVAL

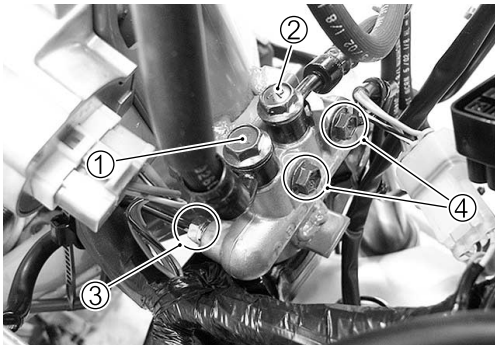

- Drain brake fluid from the combination brake system. (☞2-18)
- Remove the front leg shield. (☞7-12)
- Remove the union bolts ① and ②.
- Remove the brake pipe joint bolt ③.
- Remove the delay valve mounting bolts ④.

DELAY VALVE REMOUNTING

- Remount the delay valve in the reverse order of removal.
- Pay attention to the following points:
- Tighten the delay valve mounting bolt ① together with the clamp.

Delay valve mounting bolt: 10 N·m (1.0 kgf-m, 7.0 lb-ft)

- With the brake hose end contacted to the stopper, tighten the union bolt to the specified torque.

Union bolt: 23 N·m (2.3 kgf-m, 16.5 lb-ft)

- Tighten the brake pipe joint bolt ② to the specified torque.

Brake pipe joint bolt: 16 N·m (1.6 kgf-m, 11.5 lb-ft)

BRAKE-LOCK CABLE REPLACEMENT

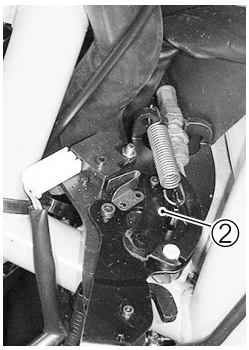

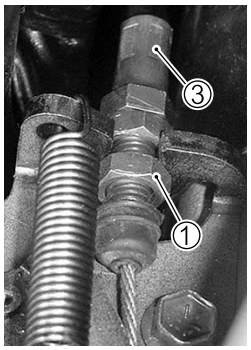

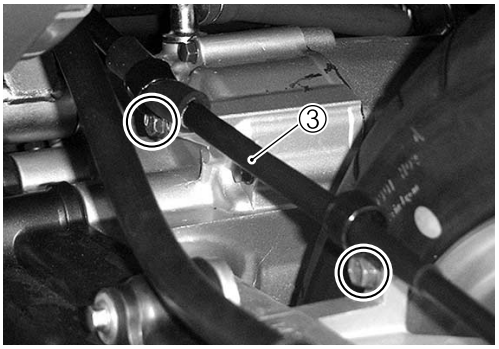

- Remove the front box. (☞7-14)
- Loosen the lock nut ① of the brake-lock lever assembly ②.
- Remove the brake-lock cable ③.

- Remove the rear brake caliper cover ④.

- Loosen the lock nut.
- Remove the brake-lock arm ⑤ and remove the brake-lock cable ⑥.

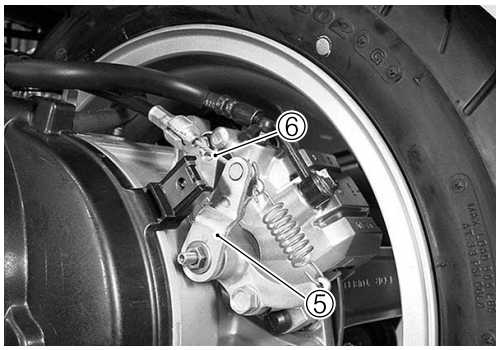

- Install the brake-lock cable. (☞9-19)
- Turn the nut ⑦ until the clearance is 0mm. (0 in)

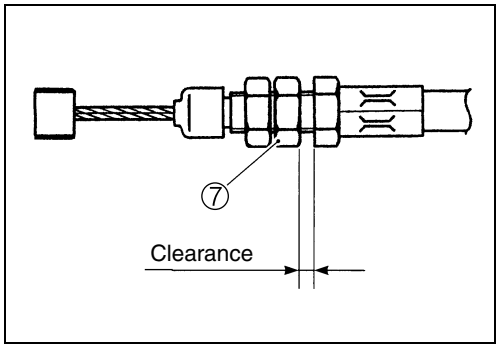

- Install the brake-lock cable to the brake-lock lever ⑧ and tighten the nut ⑨.

CAUTION

Check that the boot ⑩ is fitted securely.

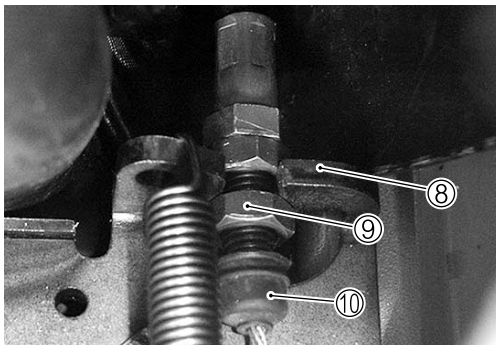

- Install the brake-lock arm ⑪. (☞7-56)

NOTE:
The open end of spring must face to the left side of vehicle as shown.

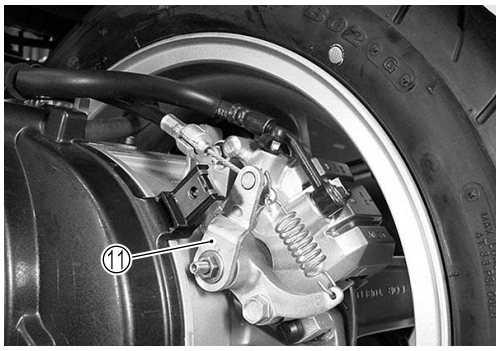

- Install the brake-lock cable.

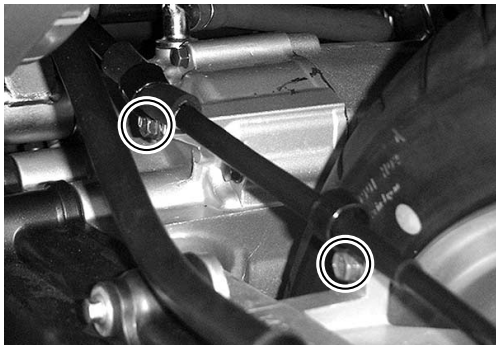

- Adjust the brake-lock. (☞2-28)
- Install the front box.

BRAKE SYSTEM

BRAKE-LOCK OPERATION

The brake-lock arm turns through the brake-lock cable as soon as pulling the brake-lock lever. The turning movement is converted to axial movement by the brake-lock adjuster connected to the body with the thread Ⓐ.

The axial movement transmits automatically from sleeve piston to adjust bolt. The adjust bolt presses brake pad to brake disk through the adjust nut/caliper piston. In this bout, the adjust bolt and asjust nut move together with the relation as shown in the illustration.

When releasing the brake-lock lever, each parts return to home position, the caliper piston will be returned by an elasticity transform of piston seal, the adjust bolt will be returned by the adjust bolt spring, the brake-lock adjuster will be returned by the return spring.

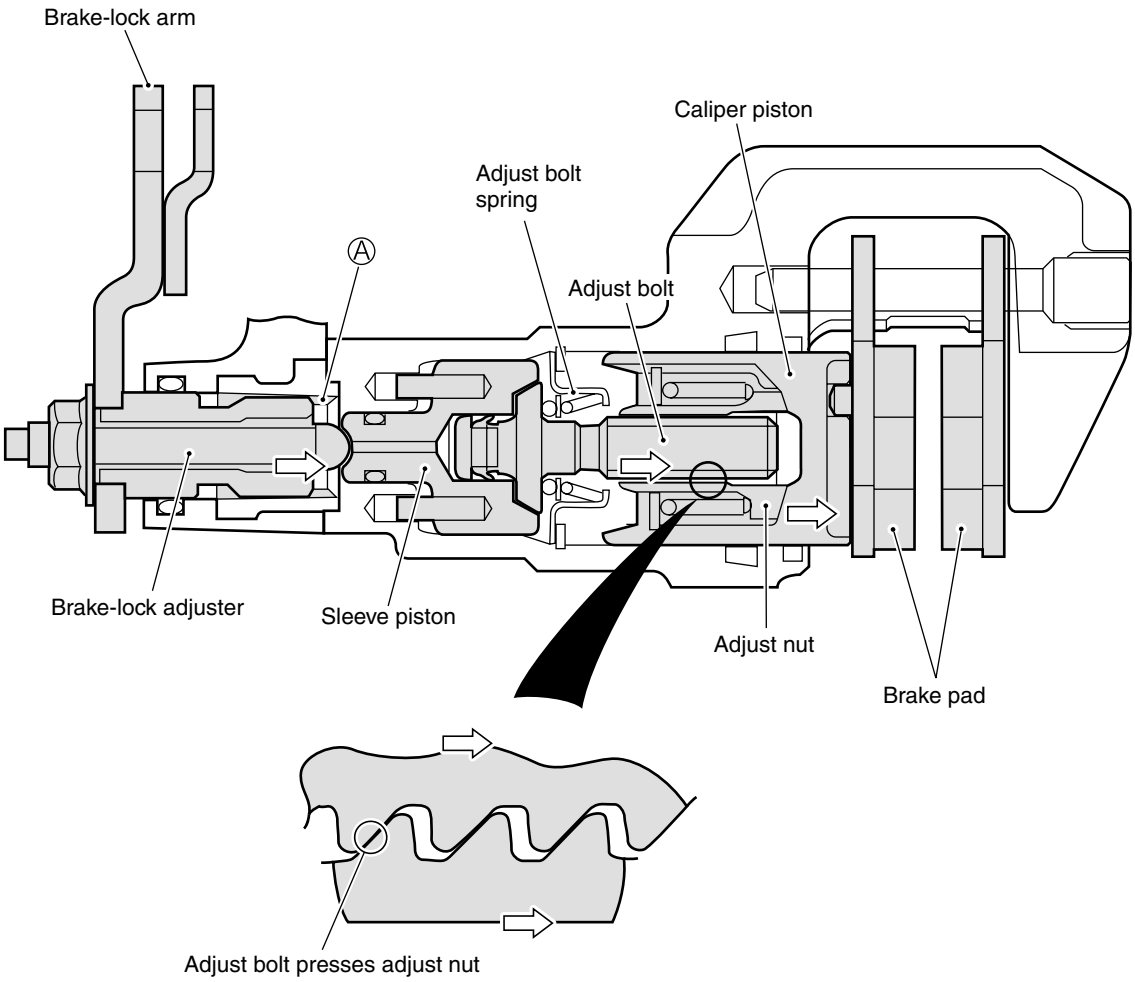

AUTOMATIC BRAKE-LOCK ADJUSTER SYSTEM

The automatic brake-lock adjuster system is equipped on the brake-lock. If the brake pad worn, the adjust bolt/nut adjust the position of caliper piston so as to keep the certain clearance between brake pad and brake disk.

OPERATION (Normal condition→Braking)

The hydraulic pressure by brake lever operation acts on the adjust nut/caliper piston, The adjust bolt threads and adjust nut threads have a clearance. The piston stroke when braking is shorter than clearance, thus, the braking operation will finish without automatic brake-lock adjuster system operation.

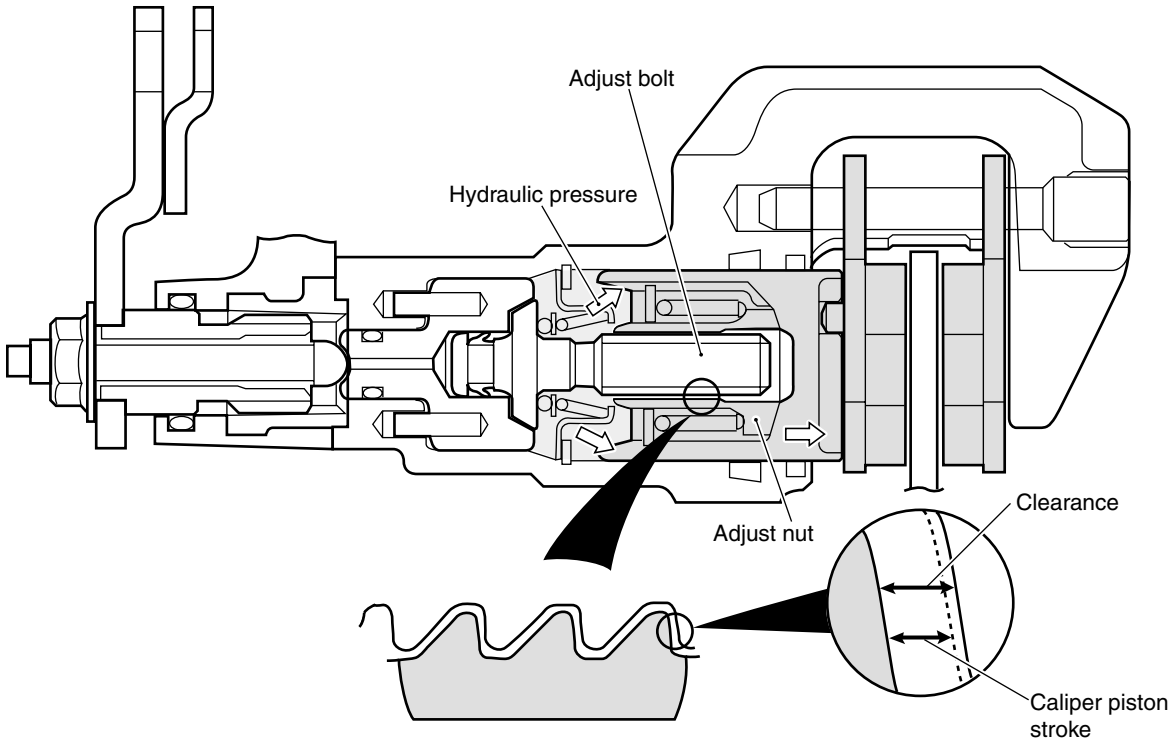

OPERATION (Brake pads are worn→Braking→Automatic adjuster operate)

If braking when the brake pad being worn, the caliper piston/adjust nut move [①] untill the clearance depended on abrasion is done away.

The axial movement [②] is converted to rotary movement and acts on the adjust bolt and adjust nut. Only the adjust bolt turns [③] because the caliper piston/adjust nut is fixed to the brake pad with caliper piston groove and pad boss at Ⓐ. Thus, the adjust bolt keeps original position with rotating as well as the caliper piston/adjust nut moves outside.

The adjust bolt stops rotating once the brake pad-to-disc clearance become zero, so the automatic adjuster operation is completed.

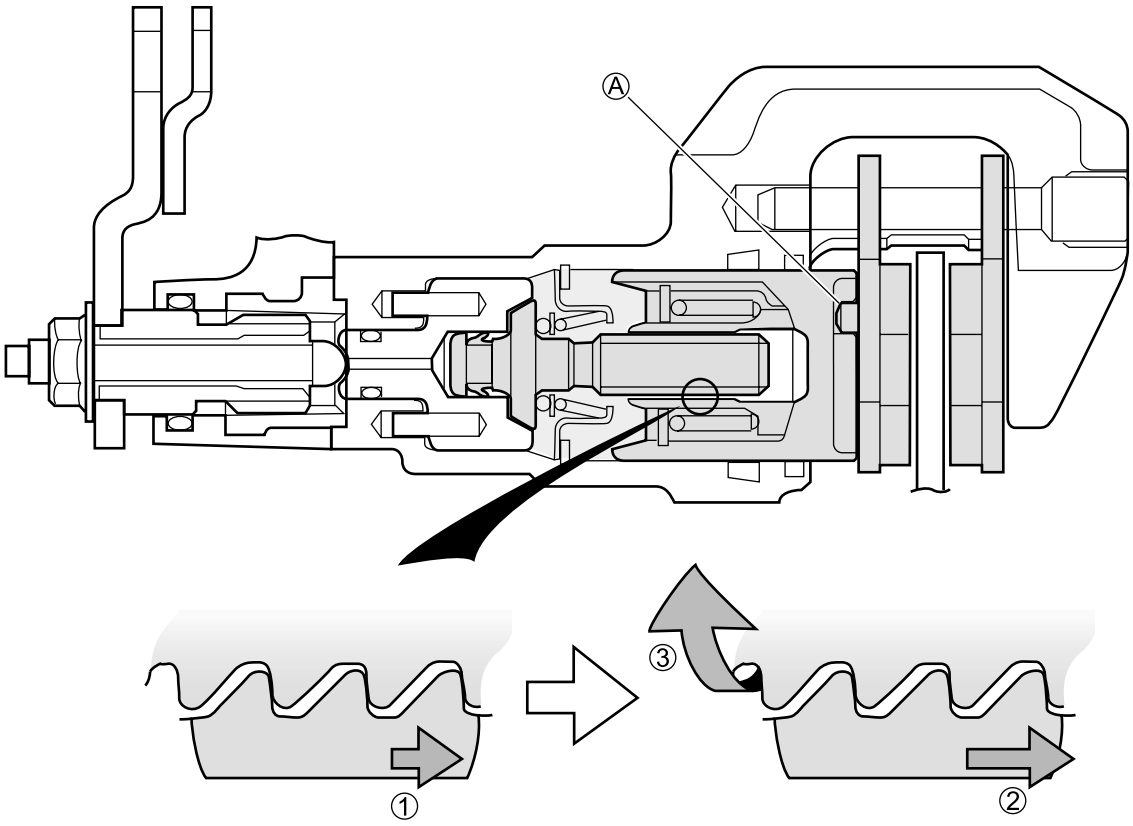

OVER-ADJUST PREVENTION MECHANISM

When rapid braking [①], the automatic brake-lock adjuster operation works too fast [②].

The caliper piston/adjust nut is forced to stop [③] as soon as the brake pad contacts with brake disk, but the adjust bolt turns by inertia force [④] after that. The adjust bolt stops after the adjust bolt/nut clearance becomes zero. On this account, the caliper piston/adjust nut can not return back [⑤] using the elasticity transform of piston seal when releasing the brake lever. It is the over-adjust condition.

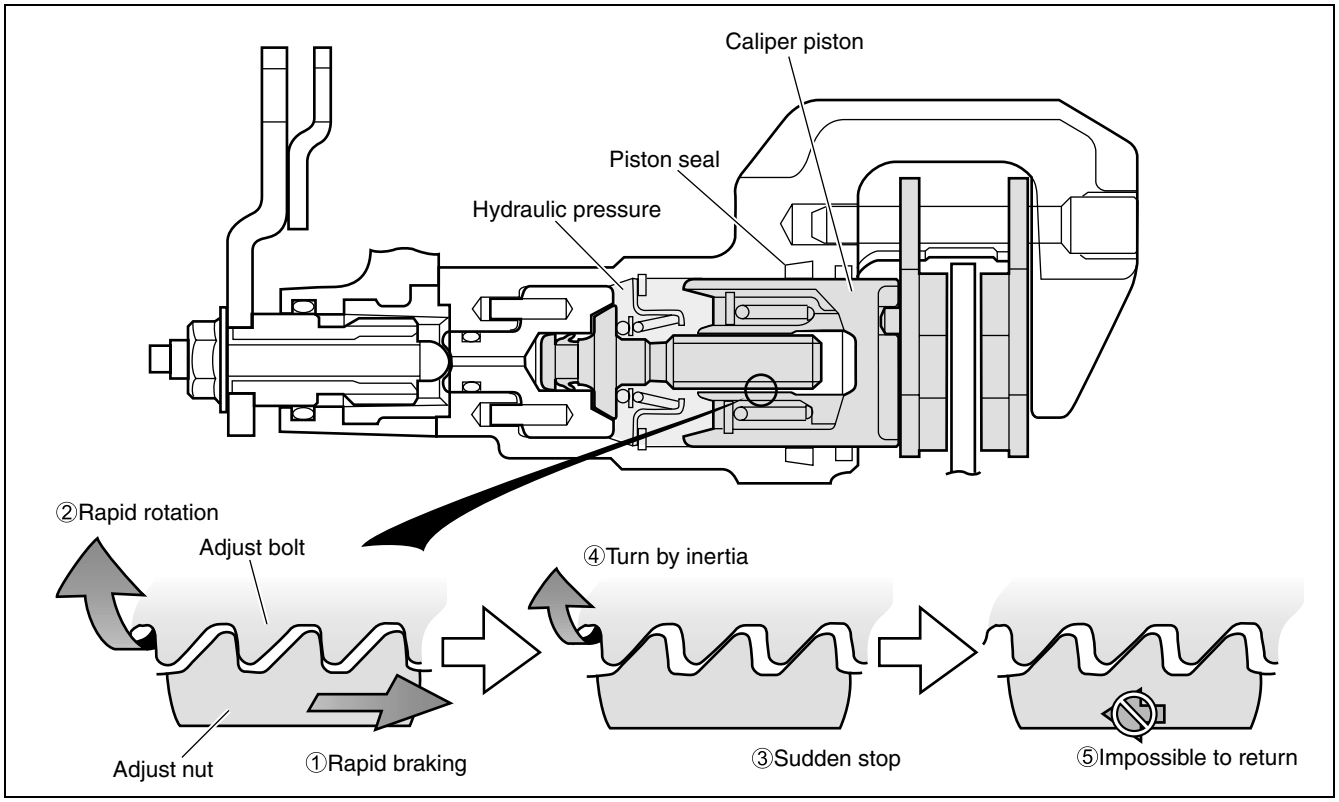

The spring is equipped between the caliper piston and the adjust nut for preventing the over-adjust, serves damper interm of rapid caliper piston movement.

The spring compress [②] as soon as the caliper piston moves exponentially [①], the adjust nut moves [③], [④] behind time. Here with, it is possible to make correct clearance of the adjust bolt/nut because the inertia force with rapid movement does not work the adjust bolt.

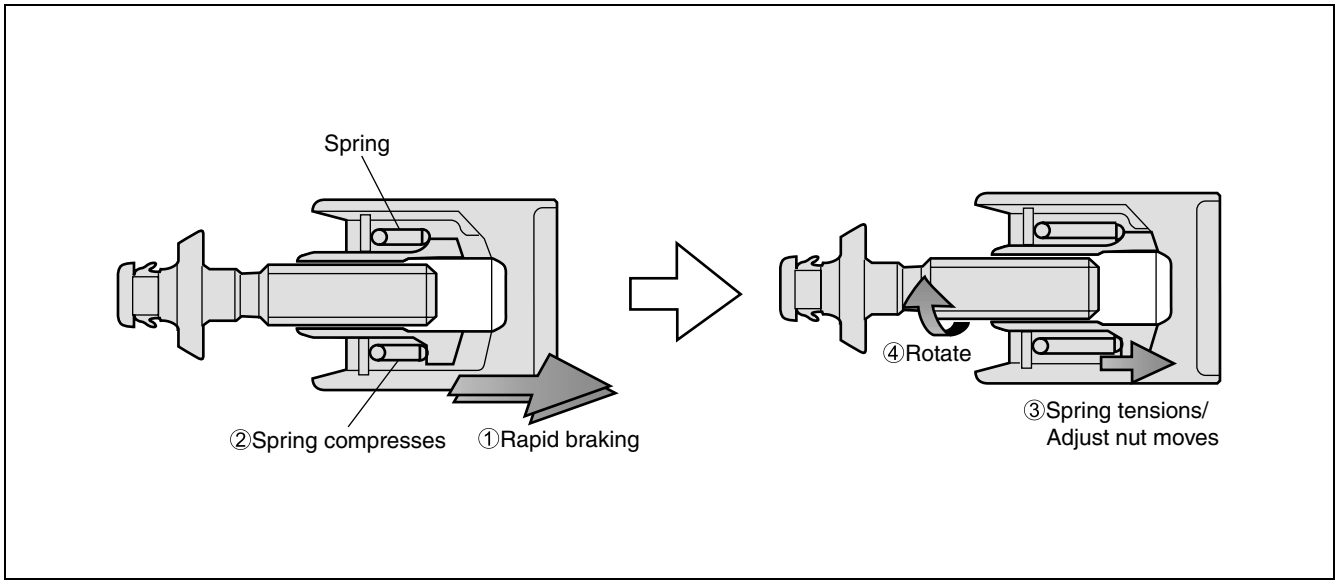

REAR SUSPENSION

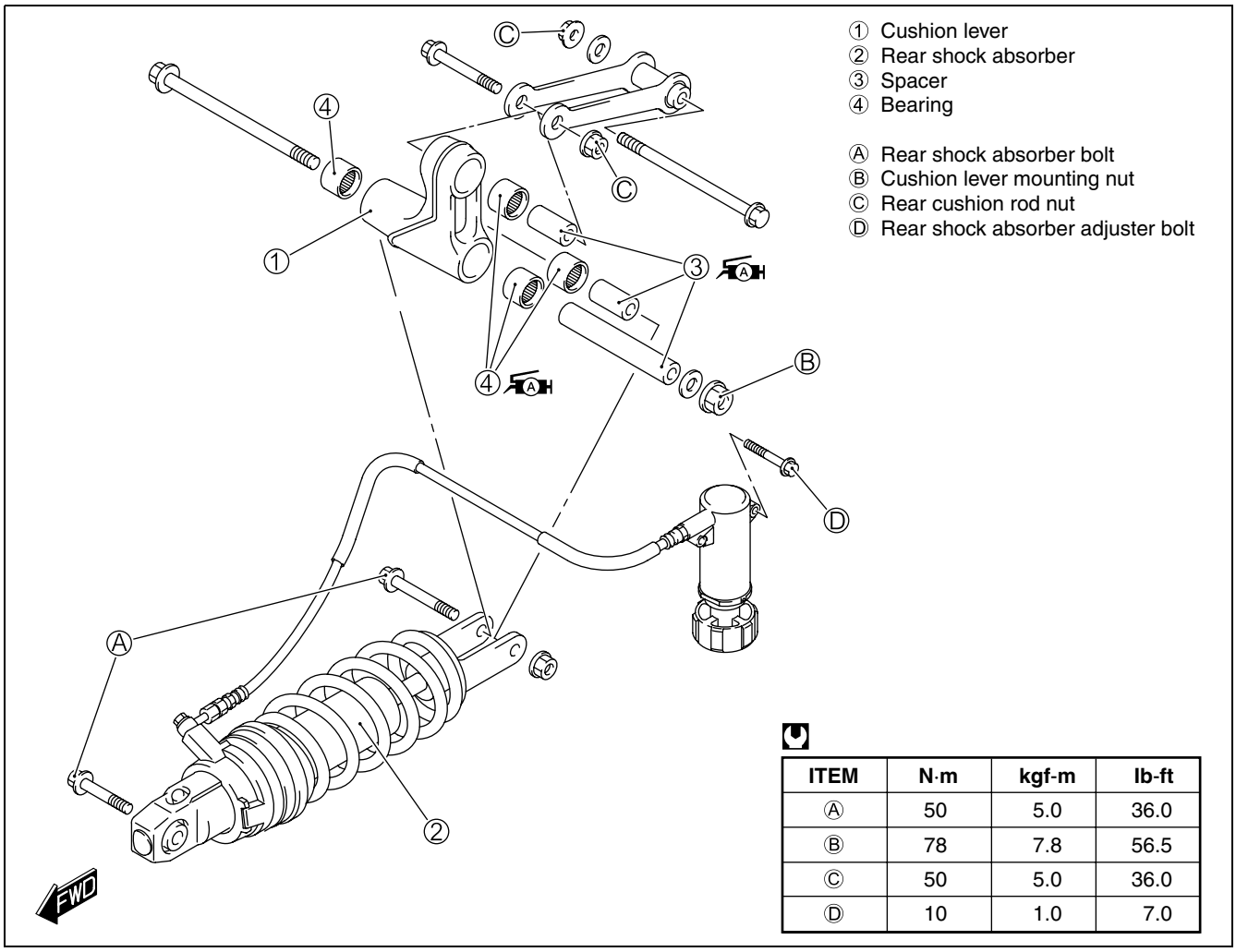

ITEM	N·m	kgf-m	lb-ft
Ⓐ	50	5.0	36.0
Ⓑ	78	7.8	56.5
Ⓒ	50	5.0	36.0
Ⓓ	10	1.0	7.0

REMOVAL AND DISASSEMBLY

- Remove the under cover ①. (☞7-14)
- Remove the side leg shield. (☞7-15)
- Remove the frame cover. (☞7-18)
- Remove the trunk box. (☞7-18)

- Remove the rear shock absorber adjuster ②.

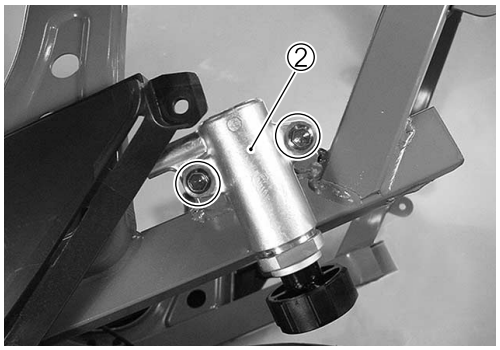

- Disconnect the clamps.

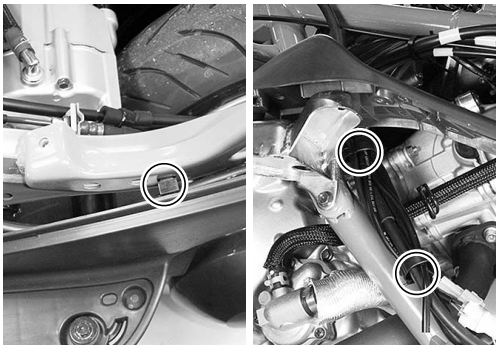

- Remove the rear shock absorber bolt ③, cushion lever mounting nut ④ and rear cushion rod nut ⑤.

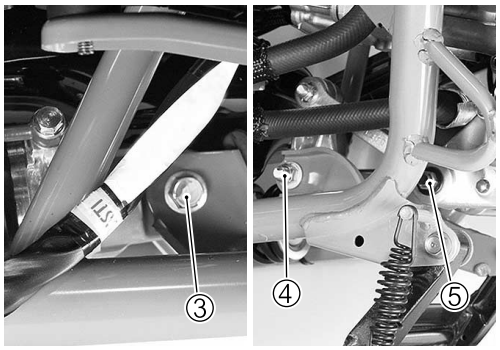

- Remove the cushion lever nuts ⑥, ⑦ and disassemble the rear suspension linkage.

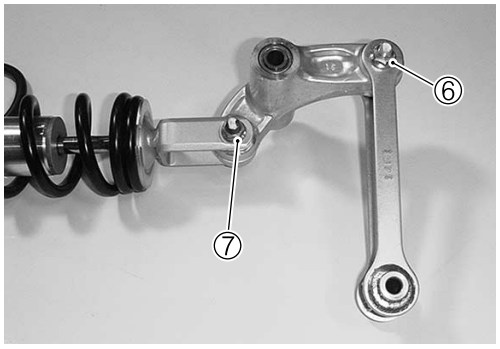

- Remove the cushion lever bearings using the special tools.

TOOL 09930-30104: Sliding shaft
09923-73210: Bearing remover

INSPECTION

CUSHION LEVER

- Inspect the cushion lever body for crack, break or other abnormal condition.
- Attempt to move the spacer laterally to see that no play exists. Also, check the spacer for smooth turning.
- If any abnormal condition is noted in the spacer movement, replace the bearing.

REAR SHOCK ABSORBER

- Inspect the rear shock absorber the hose and the adjuster body for oil leakage.

- Inspect the bushing for play and damage.
- Inspect the rear shock absorber spring for crack or other damage.
- If any defects are found, replace the shock absorber with a new one.

REAR SHOCK ABSORBER DISPOSAL

⚠ WARNING

*** Handle the rear shock absorber with caution since a high pressure nitrogen gas is contained.**
*** Avoid incineration, exposure to high pressure or overhauling.**
*** In the case of scrapping the rear shock absorber, evacuate gas in the following procedures.**

REAR SHOCK ABSORBER GAS EVACUATION

- Remove the valve cap ①.

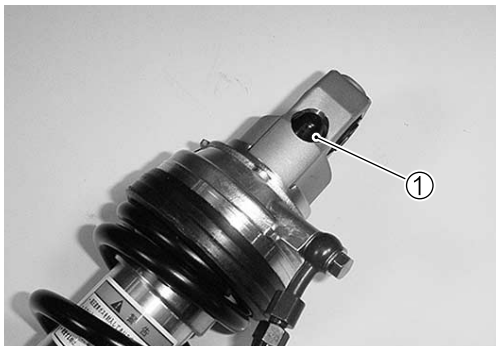

- Evacuate gas through the valve hole ②.

⚠ WARNING

Keep your face away from the valve hole.

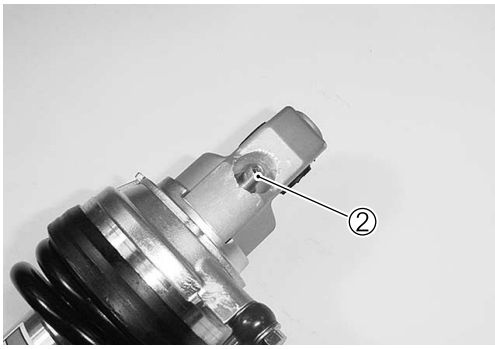

REASSEMBLY AND REMOUNTING

- Reassemble and remount the rear suspension in the reverse order of removal and disassembly.
- Pay attention to the following points:

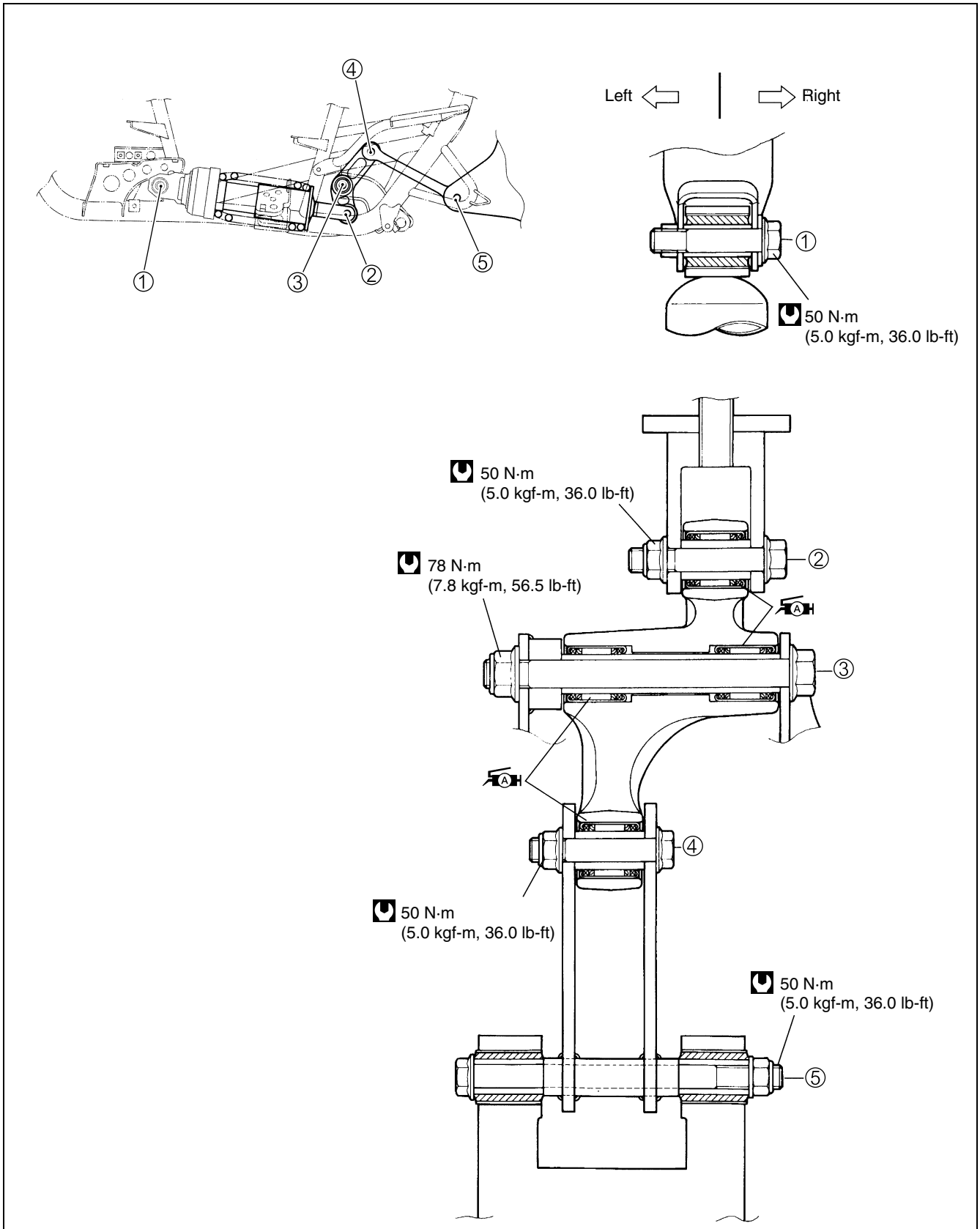

- Install the bearings using the special tool.

09941-34513: Steering race & swingarm bearing installer

CAUTION

When press-fitting the bearing, the bearing should be positioned so that its stamped mark side faces the tool.

- Prior to assembly, apply SUZUKI SUPER GREASE to each spacer and bearing.

99000-25010: SUZUKI SUPER GREASE "A" (Others)
99000-25030: SUZUKI SUPER GREASE "A" (USA)

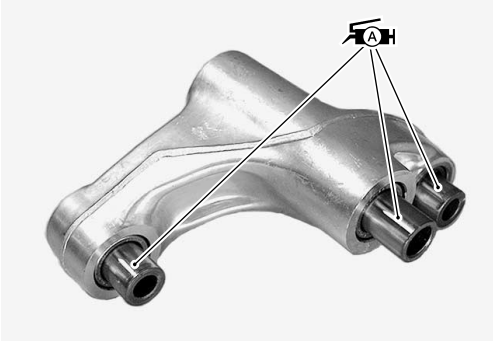

- Install the rear shock absorber and rear cushion lever. (☞7-73)

- Install the rear suspension on the chassis and tighten with bolts and nuts referring to the illustration in the previous page. (☞7-73)

NOTE:
Pass the cushion lever mounting bolt after all other bolts have been inserted.

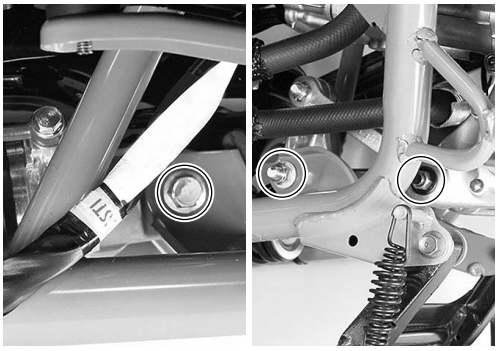

- Install the rear shock absorber adjuster ①.
- Rear shock absorber adjuster hose routing. (☞9-22)
- Tighten the rear shock absorber adjuster bolts ② to the specified torque.

Rear shock absorber adjuster bolt : 10 N·m (1.0 N·m, 7.0 lb-ft)

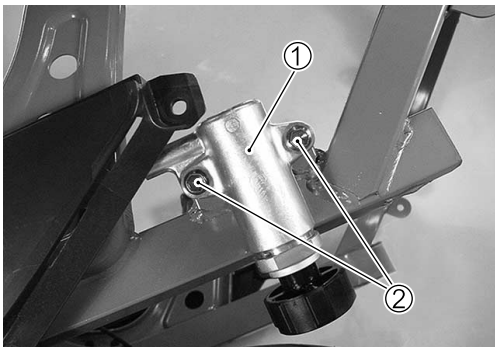

SPRING PRE-LOAD ADJUSTMENT

- Turn the adjuster handle, adjust the rear shock absorber spring pre-load. (☞2-21)

CRANKCASE BRACKET

REMOVAL AND DISASSEMBLY

- Loosen the engine mounting nut ①.
- Also loosen the crankcase bracket nut ② and rubber damper bolt ③.

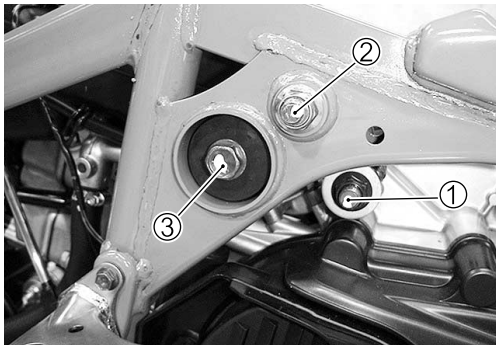

- Remove the brake-lock cable ④.

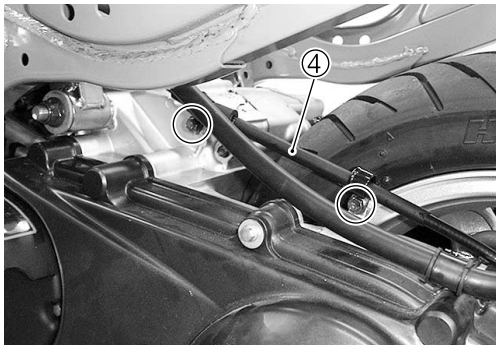

- Remove the engine mounting shaft and remove the crankcase bracket nut ⑤ and rubber damper bolts ⑥.
- Remove the crankcase bracket ⑦, rubber dampers ⑧ and spacers ⑨.

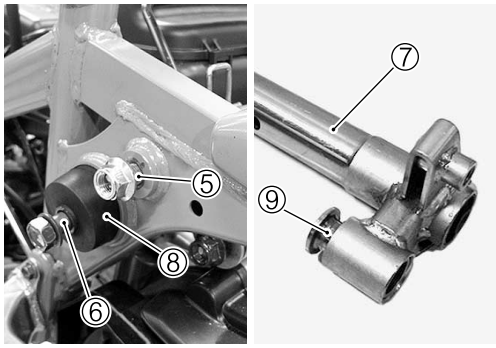

INSPECTION

- With the spacers ① inserted in the bearings ②, Inspect that the spacer turns smoothly without vertical and horizontal play.
- Replace the component if any abnormal condition is noted.
- Inspect the rubber damper and bushing for crack and damage and replace if such a defect is noted.

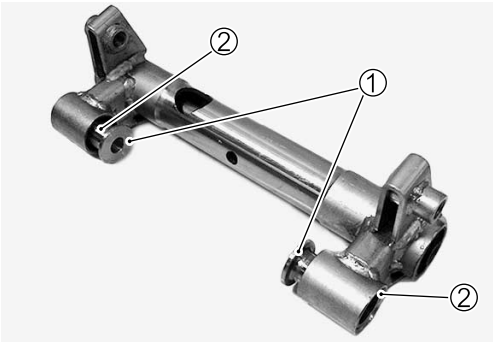

BEARING REPLACEMENT

- Remove the bearing ① using the special tools.

TOOL 09923-74511: Bearing remover
09930-30104: Sliding shaft

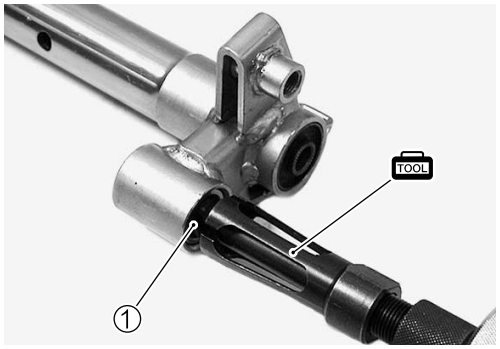

- Press in the bearing using the special tool.

TOOL 09924-84521: Bearing installer set

NOTE:
When press-fitting the bearing, the bearing should be positioned so that its stamped mark side contacts the tool.

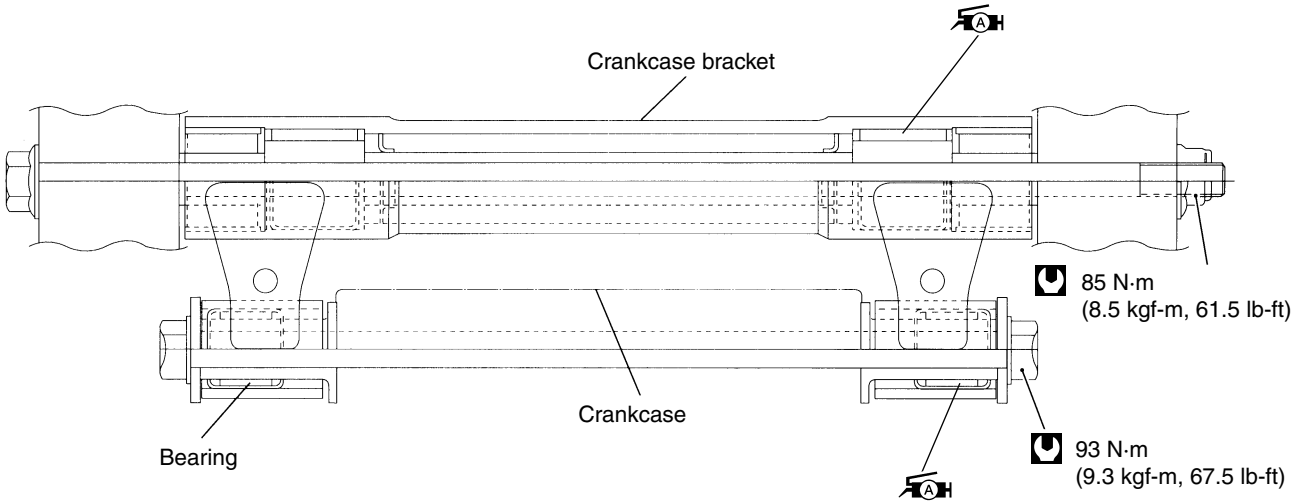

REASSEMBLY AND REMOUNTING

- Reassemble and remount the crankcase bracket in the reverse order of removal and disassembly.
- Pay attention to the following points:
- Press in the bushing with its knurled end Ⓐ facing the frame.

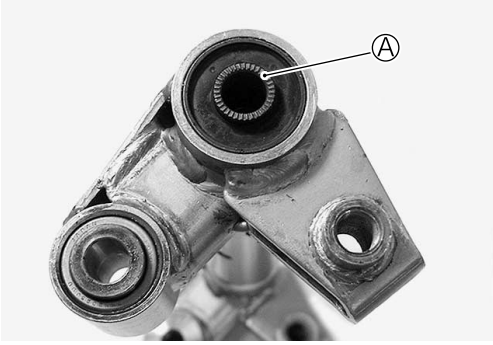

- Tighten the crankcase bracket nut ① temporarily.
- Temporarily assemble the washer and rubber damper bolt ② without installing the rubber damper.
- Push the crankcase bracket in the direction shown by the arrow to provide clearance of 2mm between the rubber damper hole and the washer, hold the bracket in that position and tighten the crankcase bracket nut ① to specification.

Crankcase bracket nut: 85 N·m (8.5 kgf-m, 61.5 lb-ft)

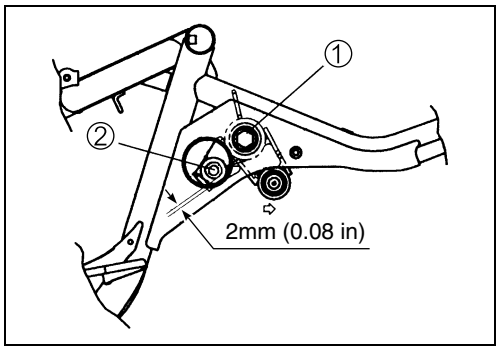

- Insert a steel rod ③ into the crankcase bracket and move the bracket to the direction shown by the arrow.
- Install the rubber damper ④ and washer and tighten the rubber damper bolt ⑤.

Rubber damper bolt: 85 N·m (8.5 kgf-m, 61.5 lb-ft)

- Tighten the engine mounting nut ⑥.

Engine mounting nut: 93 N·m (9.3 kgf-m, 67.5 lb-ft)

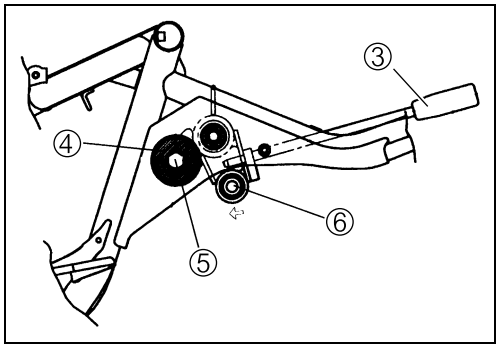

TIRE AND WHEEL

TIRE REMOVAL

The most critical factor of tubeless tire is the seal between the wheel rim and the tire bead. For this reason, it is recommended to use a tire changer that can satisfy this sealing requirement and can make the operation efficient as well as functional.
For operating procedures, refer to the instructions supplied by the tire changer manufacturer.

NOTE:
When removing the tire in the case of repair or inspection, mark the tire with a chalk to indicate the tire position relative to the valve position.
Even though the tire is refitted to the original position after repairing puncture, the tire may have to be balanced again since such a repair can cause imbalance.

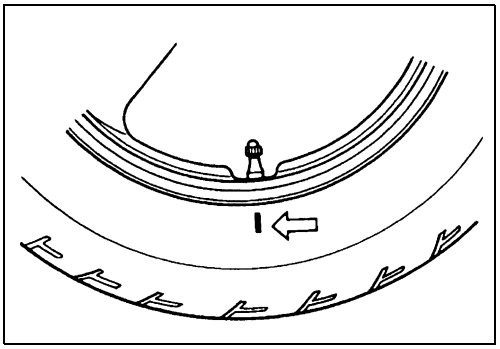

INSPECTION

WHEEL

Wipe the wheel clean and check for the following:
- Distortion and crack
- Any flaws and scratches at the bead seating area.
- Wheel rim runout

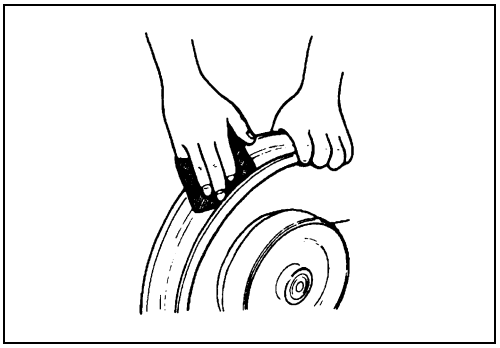

TIRE

Tire must be checked for the following points:
- Nick and rupture on side wall
- Tire tread depth
- Tread separation
- Abnormal, uneven wear on tread
- Surface damage on bead
- Localized tread wear due to skidding(Flat spot)
- Abnormal condition of inner liner

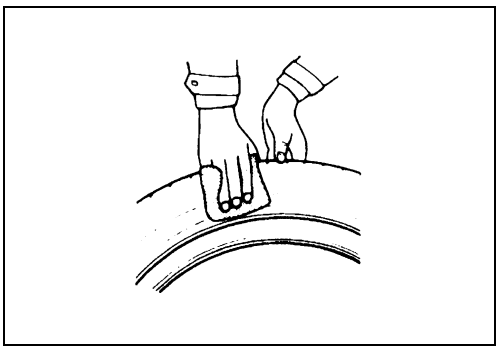

VALVE INSPECTION

Inspect the valve after the tire is removed from the rim.Replace the valve with a new one if the seal Ⓐ rubber is peeling or has damage.

NOTE:
If the external appearance of the valve shows no abnormal condition, removing of the valve is not necessary.
If the seal has abnormal deformation, replace the valve with a new one.

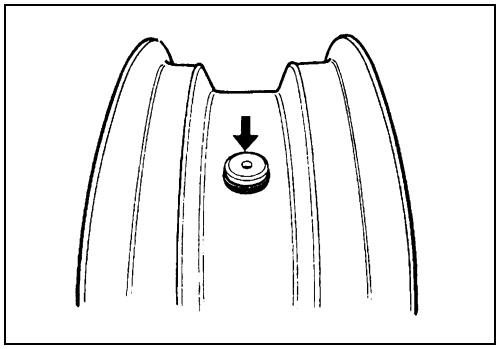

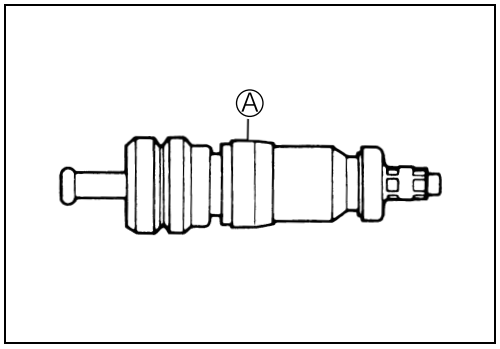

Any dust or rust around the valve hole Ⓑ must be cleaned off. Then install the valve Ⓒ in the rim.

NOTE:
To properly install the valve into the valve hole, apply a special tire lubricant or neutral soapy liquid to the valve.

CAUTION

Be careful not to damage the lip Ⓒ of valve.

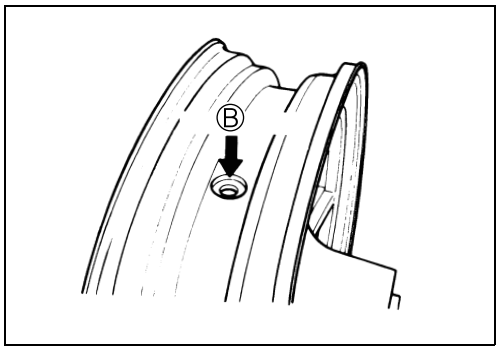

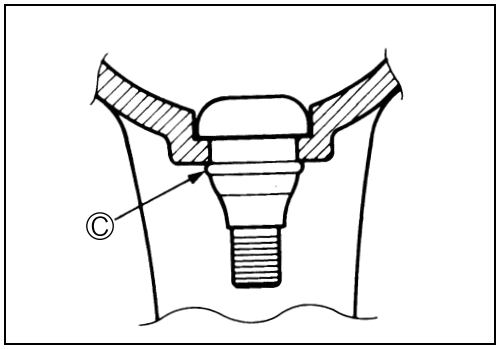

TIRE INSTALLATION

- Apply tire lubricant to the tire bead.
- When installing the tire onto the wheel, observe the following points.

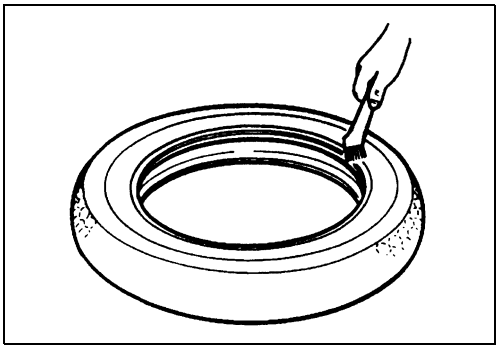

CAUTION

*** Do not reuse the valve which has been once removed.**
*** Never use oil, grease or gasoline on the tire bead in place of tire lubricant.**

- When installing the tire, the arrow Ⓐ on the side wall should point to the direction of wheel rotation.
- Align the chalk mark put on the tire at the time of removal with the valve position.

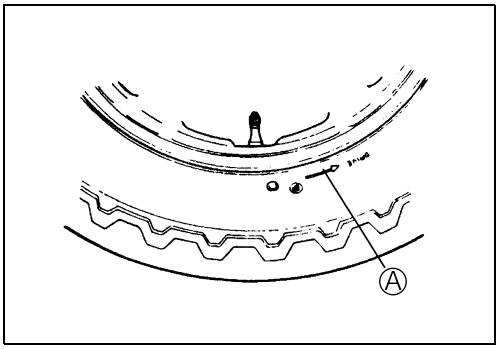

- For installation procedure of tire onto the wheel, follow the instructions given by the tire changer manufacturer.
- Bounce the tire several times while rotating. This makes the tire bead expand outward to contact the wheel, thereby facilitating air inflation.
- Inflate the tire.

⚠ WARNING

*** Do not inflate the tire to more than 400 kPa (4.0 kgf/cm², 57 psi). If inflated beyond this limit, the tire can burst and possibly cause injury. Do not stand directly over the tire while inflating.**
*** In the case of preset pressure air inflator, pay special care for the set pressure adjustment.**

- In this condition, check the “rim line” Ⓐ cast on the tire side walls. The line must be equidistant from the wheel rim all around. If the distance between the rim line and wheel rim varies, this indicates that the bead is not properly seated. If this is the case, deflate the tire completely and unseat the bead for both sides. Coat the bead with lubricant and fit the tire again.
- When the bead has been fitted properly, adjust the pressure to specification.
- As necessary, adjust the tire balance.

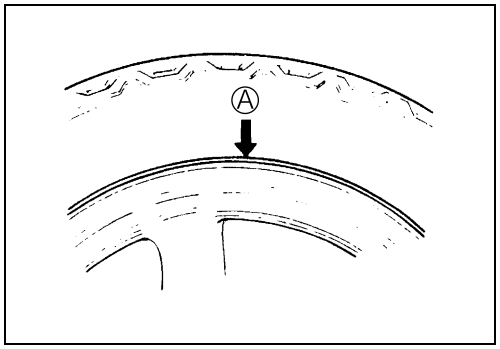

CAUTION

Do not run with a repaired tire at a high speed.

DATA Cold inflation tire pressure

	Front	Rear
Solo riding	175 kPa (1.75 kgf/cm², 25 psi)	200 kPa (2.00 kgf/cm², 28 psi)
Dual riding	175 kPa (1.75 kgf/cm², 25 psi)	280 kPa (2.80 kgf/cm², 40 psi)

BALANCER WEIGHT INSTALLATION

- When installing the balancer weights to the wheel, set the two balancer weights Ⓑ on both sides of wheel rim.

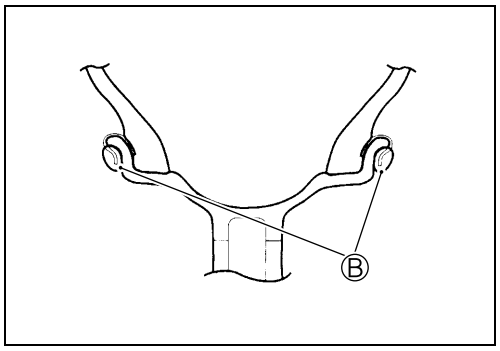

CAUTION

Weight difference between the two balancer weights must be less than 10 g (0.02 lb).

ELECTRICAL SYSTEM

CONTENTS

ELECTRICAL SYSTEM

CONTENTS

CAUTIONS IN SERVICING

CONNECTORS

- When disconnecting a connector, be sure to hold the terminals; do not pull the lead wires.
- When connecting a connector, push it in so it is firmly attached.
- Inspect the connector for corrosion, contamination and any breakage in the cover.

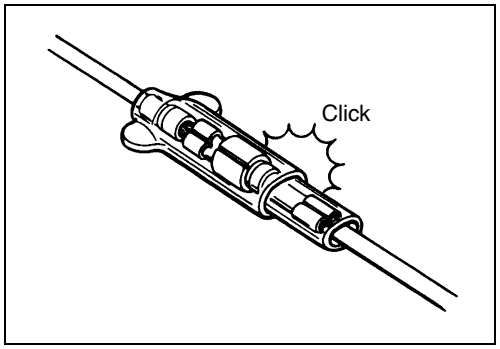

COUPLERS

- With a lock-type coupler, be sure to release the lock before disconnecting it. When connecting a coupler, push it in until the lock clicks shut.
- When disconnecting a coupler, be sure to hold the coupler, do not pull the lead wires.
- Inspect each terminal on the coupler for looseness or bends.
- Inspect each terminal for corrosion and contamination.

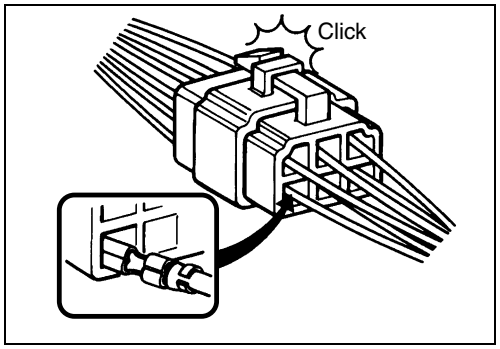

CLAMPS

- Refer to the “WIRING HARNESS ROUTING” section for proper clamping procedures. (☞9-17 to 9-18)
- Bend the clamp properly, as shown in the illustration.
- When clamping the wire harness, do not allow it to hang down.
- Do not use wire or any substitutes for the band-type clamp.

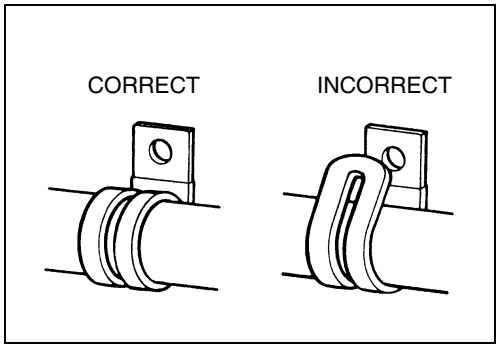

FUSE

- When a fuse blows, always investigate the cause, correct the problem, and then replace the fuse.
- Do not use a fuse of a different capacity.
- Do not use any substitutes for the fuse (e.g., wire).

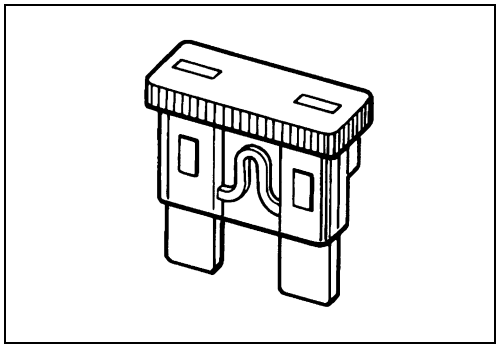

SEMI-CONDUCTOR EQUIPPED PARTS

- Do not drop any part that contains a semi-conductor (e.g., ECM, regulator/rectifier).
- When inspecting the part, follow the inspection instructions carefully. Neglecting proper procedures may cause this part to be damaged.

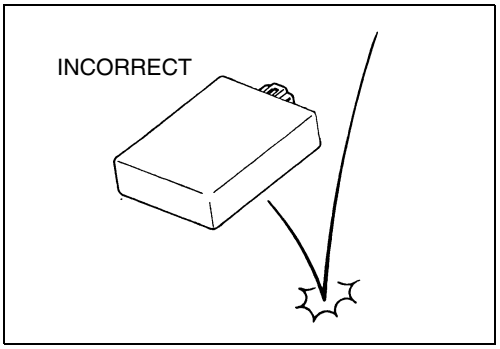

BATTERY

- The MF battery used in this motorcycle does not require main-tenance (e.g., electrolyte level inspection, distilled water replenishment).
- During normal charging, no hydrogen gas is produced. However, if the battery is overcharged, hydrogen gas may be produced. Therefore, be sure there are no fire or spark sources (e.g., short circuit) nearby when charging the battery.
- Be sure to recharge the battery in a well-ventilated and open area.
- Note that the charging system for the MF battery is different from that of a conventional battery. Do not replace the MF battery with a conventional battery.

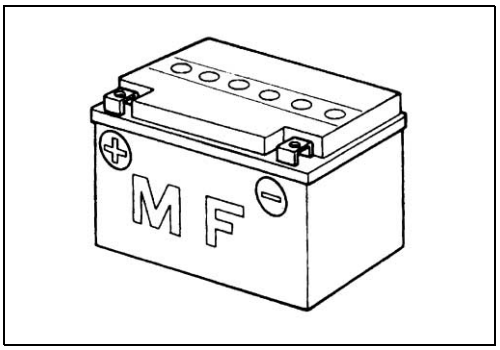

CONNECTING THE BATTERY

- When disconnecting terminals from the battery for disas-sem-bly or servicing, be sure to disconnect the ⊖ battery lead wire, first.
- When connecting the battery lead wires, be sure to connect the ⊕ battery lead wire, first.
- If the terminal is corroded, remove the battery, pour warm water over it and clean it with a wire brush.
- After connecting the battery, apply a light coat of grease to the battery terminals.
- Install the cover the ⊕ battery terminal.

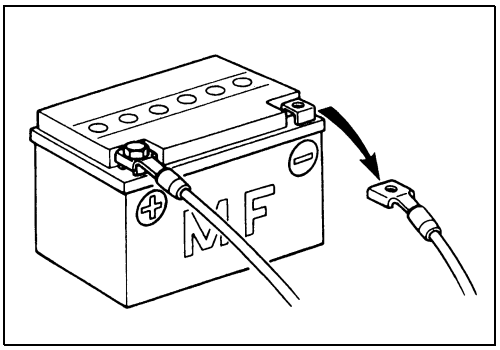

WIRING PROCEDURE

- Properly route the wiring harness according to the “WIRING HARNESS ROUTING” section. (☞9-17 to 9-18)

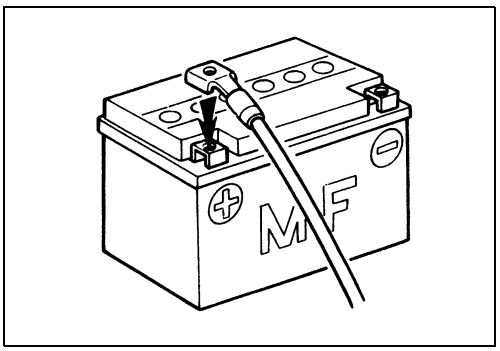

USING THE MULTI CIRCUIT TESTER

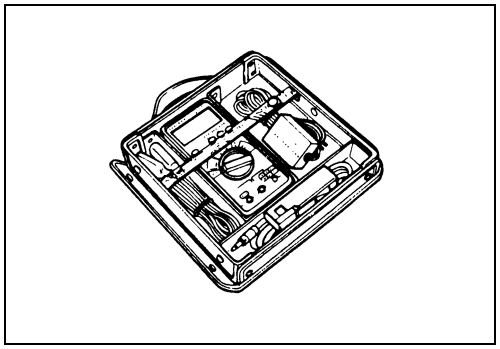

- Properly use the multi circuit tester ⊕ and ⊖ probes. Improper use can cause damage to the motorcycle and tester.
- If the voltage and current values are not known, begin measuring in the highest range.
- When measuring the resistance, make sure no voltage is applied. If voltage is applied, the tester will be damaged.
- After using the tester, be sure to turn the switch to the OFF position.

CAUTION

Before using the multi circuit tester, read its instruction manual.

LOCATION OF ELECTRICAL COMPONENTS

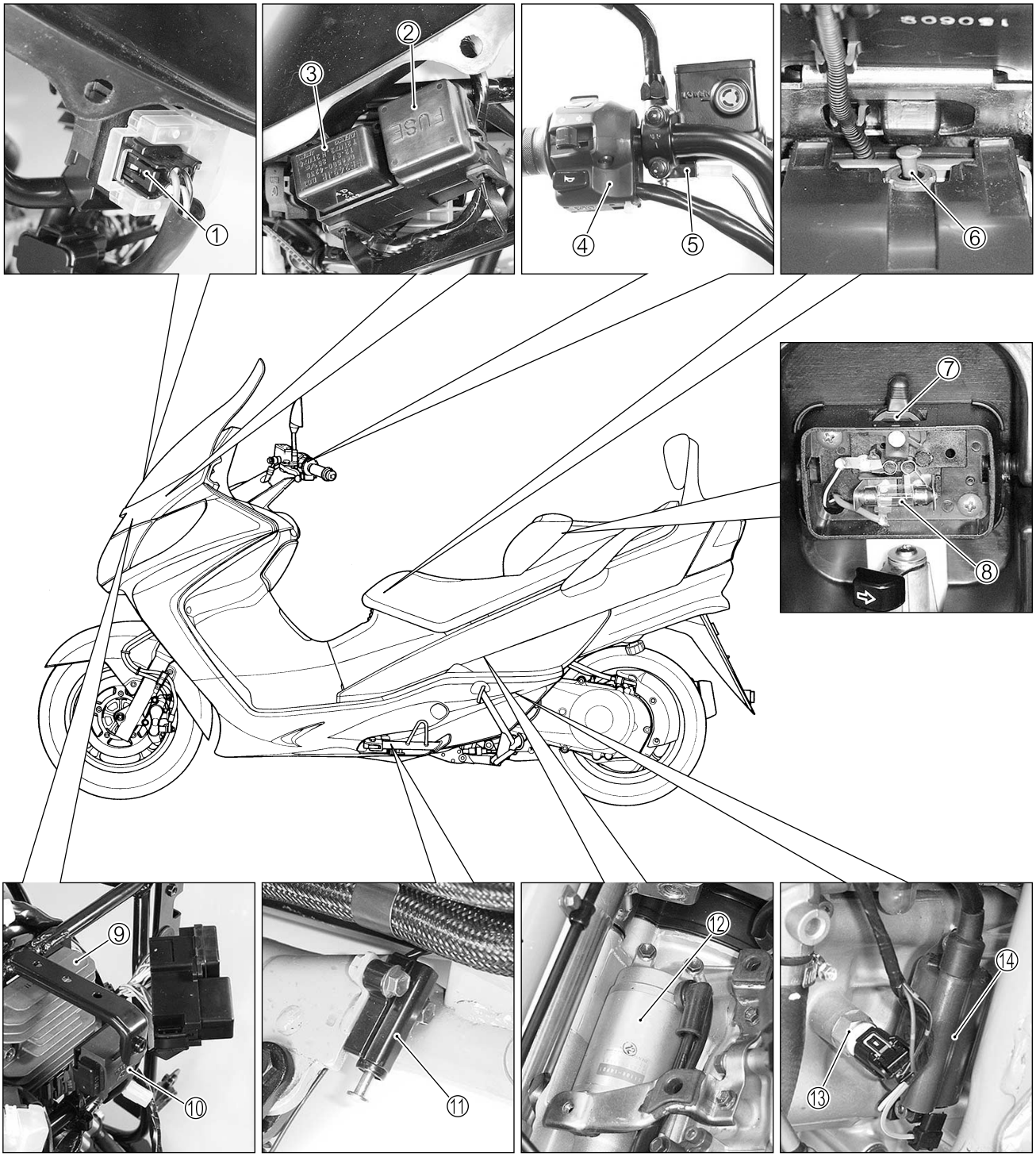

① Starter relay
② Fuse box
③ Turn signal / Side-stand relay
④ Left handlebar switch
⑤ Left brake switch
⑥ Trunk light seat switch
⑦ Trunk light switch
⑧ Trunk light
⑨ Regulator / rectifier
⑩ TO sensor (☞4-35)
⑪ Side-stand switch
⑫ Starter motor
⑬ ECT sensor (☞6-9)
⑭ Ignition coil

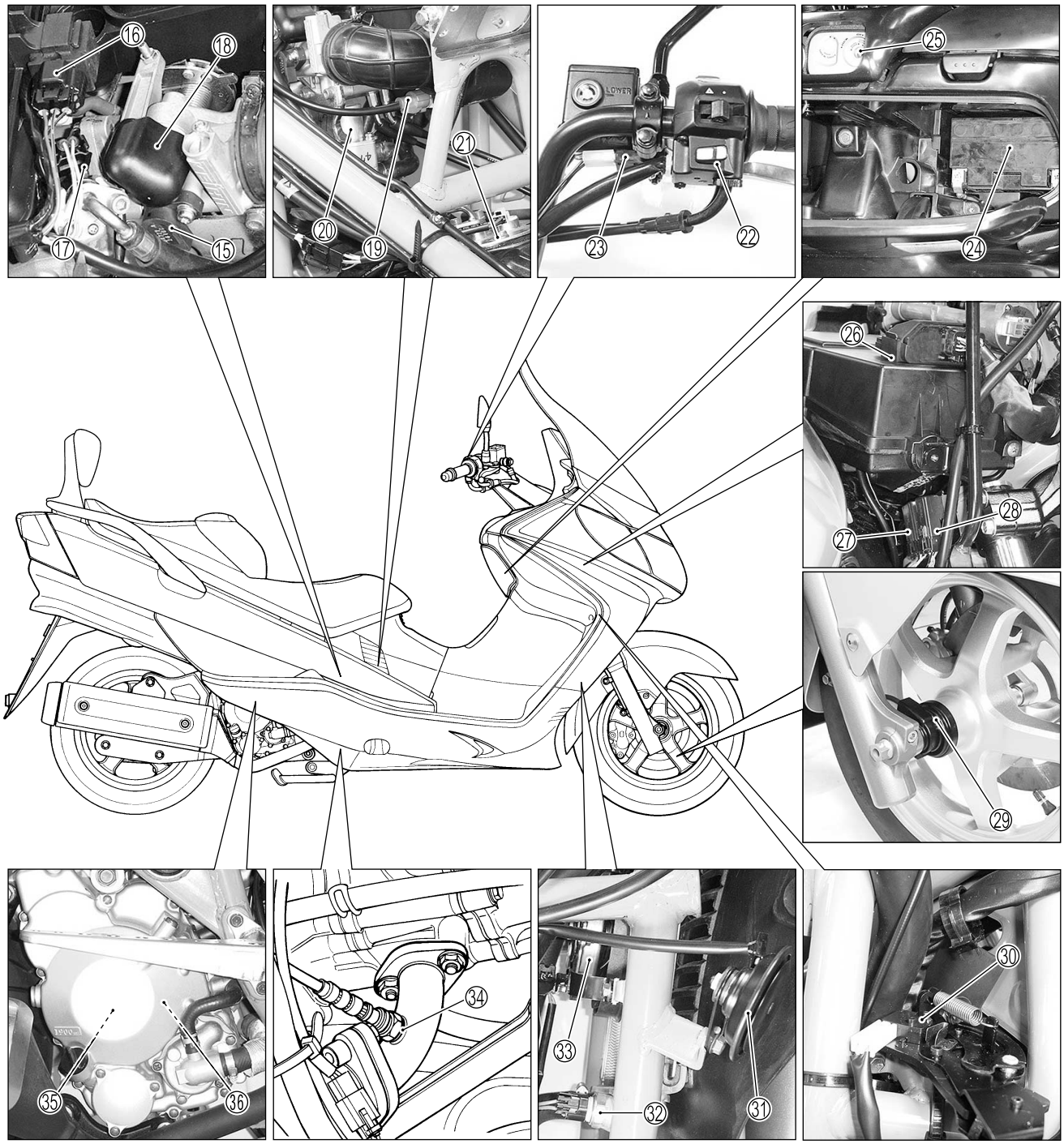

⑮ TP sensor (☞4-28)
⑯ IAP sensor (☞4-25)
⑰ Injector (☞4-37)
⑱ IAC valve (☞4-39)
⑲ IAT sensor (☞4-33)
⑳ PAIR control solenoid valve (☞10-6)
㉑ Fuel pump (☞5-8)
㉒ Right handle switch
㉓ Right brake switch
㉔ Battery
㉕ Ignition switch
㉖ ECM (Engine Control Module)
㉗ Fuel pump relay
㉘ Safety relay
㉙ Speed sensor
㉚ Brake-lock switch
㉛ Horn
㉜ Cooling fan switch
㉝ Cooling fan
㉞ HO2 sensor (☞4-42)
㉟ Generator
㊱ CKP sensor (☞4-23)

CHARGING SYSTEM

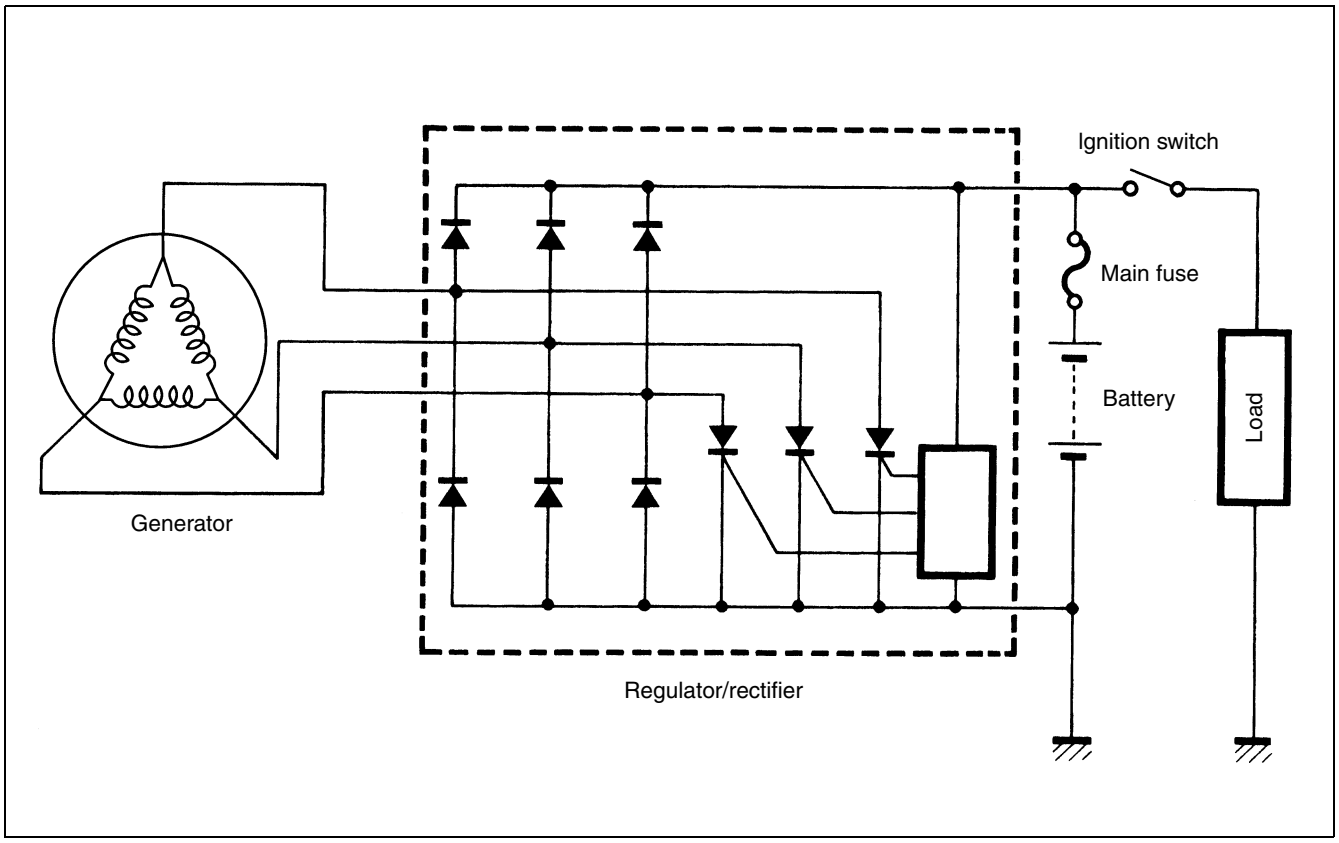

TROUBLE SHOOTING

Battery runs down quickly

Step1

1) Check accessories which use excessive amounts of electricity.
   Are accessories being installed?

YES	Remove accessories.
NO	Go to Step2.

Step2

1) Check the battery for current leaks. (☞8-10)
   Is the battery for current leaks OK?

YES	Go to Step3.
NO	• Short circuit of wire harness. • Faulty electrical equipment.

Step3

1) Measure the charging voltage between the battery terminals. (☞8-10)
   Is the battery charging of voltage OK?

YES	• Faulty battery. • Abnormal
NO	Go to Step4.

Step4

1) Measure the continuity of the generator coil. (☞8-11)
   Is the resistance of generator coil OK?

YES	Go to Step5.
NO	• Faulty generator coil. • Disconnected lead wires.

Step5

1) Measure the generator no-load voltage. (☞8-11)
   Is generator no-load performance OK?

YES	Go to Step6.
NO	Faulty generator.

Step6

1) Inspect the regulator/rectifier. (☞8-12)
   Is the regulator/rectifier OK?

YES	Go to Step7.
NO	Faulty regulator/rectifier.

Step7

1) Inspect the wire harness.
   Is the wire harness OK?

YES	Faulty battery
NO	• Short circuit of wire harness. • Poor contact of coupler.

Battery overcharges

- Faulty regulator/rectifier.
- Faulty battery.
- Poor contact of generator lead wire coupler.

CHARGING SYSTEM INSPECTION

BATTERY CURRENT LEAKAGE INSPECTION

- Turn the ignition switch to the “OFF” position.
- Remove the battery cover. (☞8-36)
- Disconnect the ⊖ battery lead wire.

Measure the current between ⊖ battery terminal and the ⊖ battery lead wire using the multi circuit tester. If the reading exceeds the specified value, leakage is evident.

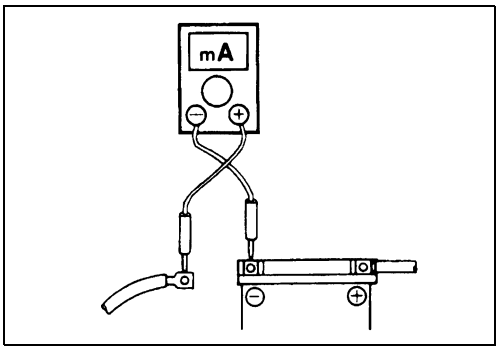

TOOL 09900-25008: Multi circuit tester set

Tester knob indication: Current (⎓, 20 mA)

DATA Battery current (leak): 3 mA and below

CAUTION

- **Because the current leak might be large, turn the tester to the high range first to avoid tester damage.**
- **Do not turn the ignition switch to the “ON” position when measuring current.**
- **Do not open the trunk during testing.**

When checking to find the excessive current leakage, remove the couplers and connectors, one by one, checking each part.

REGULATED VOLTAGE INSPECTION

- Remove the battery cover. (☞8-36)
- Remove the left side leg shield. (☞7-15)
- Start the engine, turn the ignition switch and the dimmer switch to HI and run the engine at 5 000 r/min.

Measure the DC voltage between the ⊕ and ⊖ battery terminals using the multi circuit tester.

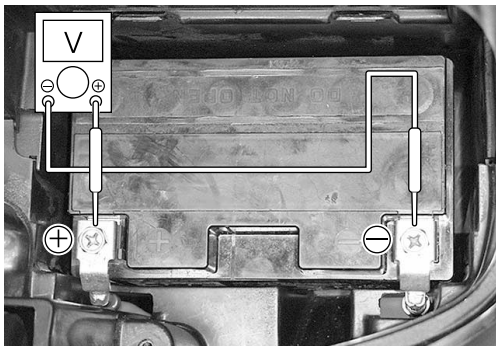

NOTE:
When making this test, be sure that the battery is in fullycharged condition.

If the voltage in not within the specified value, inspect the generator and regulator/rectifier. (☞8-11)

TOOL 09900-25008: Multi circuit tester set

Tester knob indication: Voltage (⎓)

DATA Regulated voltage: 14.0 – 15.5 V at 5 000 r/min

GENERATOR COIL RESISTANCE INSPECTION

- Remove the front box. (☞7-14)
- Disconnect the generator coupler ①.

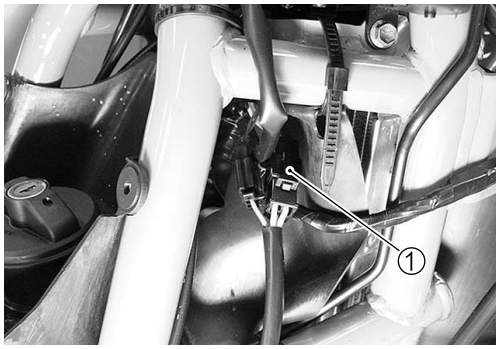

Measure the resistance between the three lead wires.
If the resistance is not specified value, replace the stator coil with a new one.
Also, check that the generator core is insulated.

TOOL 09900-25008: Multi circuit tester set

Tester knob indication: Resistance (Ω)

DATA Generator coil resistance : 0.2 – 0.6 Ω (Yellow – Yellow)
: ∞ Ω (Yellow – Ground)

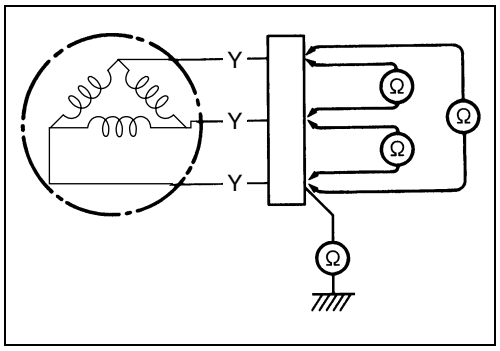

GENERATOR NO-LOAD PERFORMANCE INSPECTION

- Remove the front box. (☞7-14)
- Disconnect the generator coupler.
- Start the engine and run it at 5 000 r/min.

Measure the AC voltage between the lead wires of the generator using the multi circuit tester.
If the voltage is under the specified value, replace the AC generator with a new one.

TOOL 09900-25008: Multi circuit tester set

Tester knob indication: Voltage (~)

DATA Generator no-load performance (when engine is cold):
55 V (AC) and more at 5 000 r/min

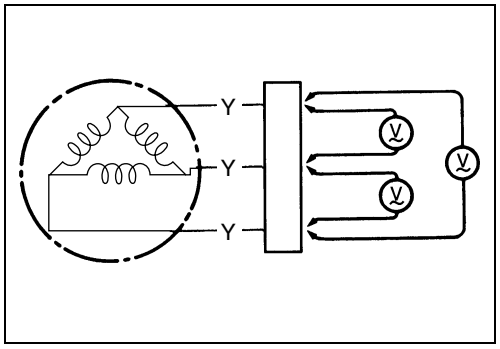

REGULATOR/RECTIFIER INSPECTION

- Remove the front meter panel. (☞7-13)
- Disconnect the regulator/rectifier couplers.

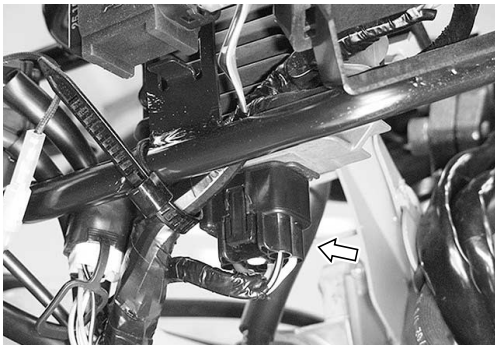

- Remove the regulator/rectifier ①.

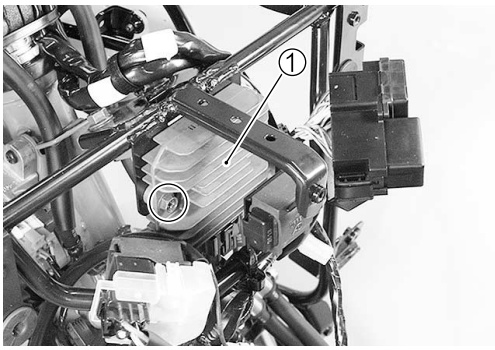

Measure the voltage between the terminals using the multi circuit tester, as indicated in the table below.
If the voltage is not within the specified value, replace the regulator/rectifier with a new one.

TOOL 09900-25008: Multi circuit tester set

Tester knob indication: Diode test (⊣◀⊢)

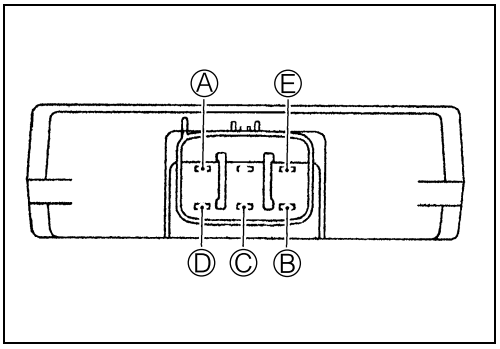

Unit:V

		⊖ Tester prove				
		Ⓐ	Ⓑ	Ⓒ	Ⓓ	Ⓔ
⊕ Tester prove	Ⓐ		0.4 – 0.7	0.4 – 0.7	0.4 – 0.7	0.5 – 1.2
	Ⓑ	✻		✻	✻	0.4 – 0.7
	Ⓒ	✻	✻		✻	0.4 – 0.7
	Ⓓ	✻	✻	✻		0.4 – 0.7
	Ⓔ	✻	✻	✻	✻	

✻ 1.4 V and more (tester's battery voltage)

NOTE:
If the tester reads under 1.4 V when the tester probes are not connected, replace the battery of multi circuit tester.

STARTER SYSTEM

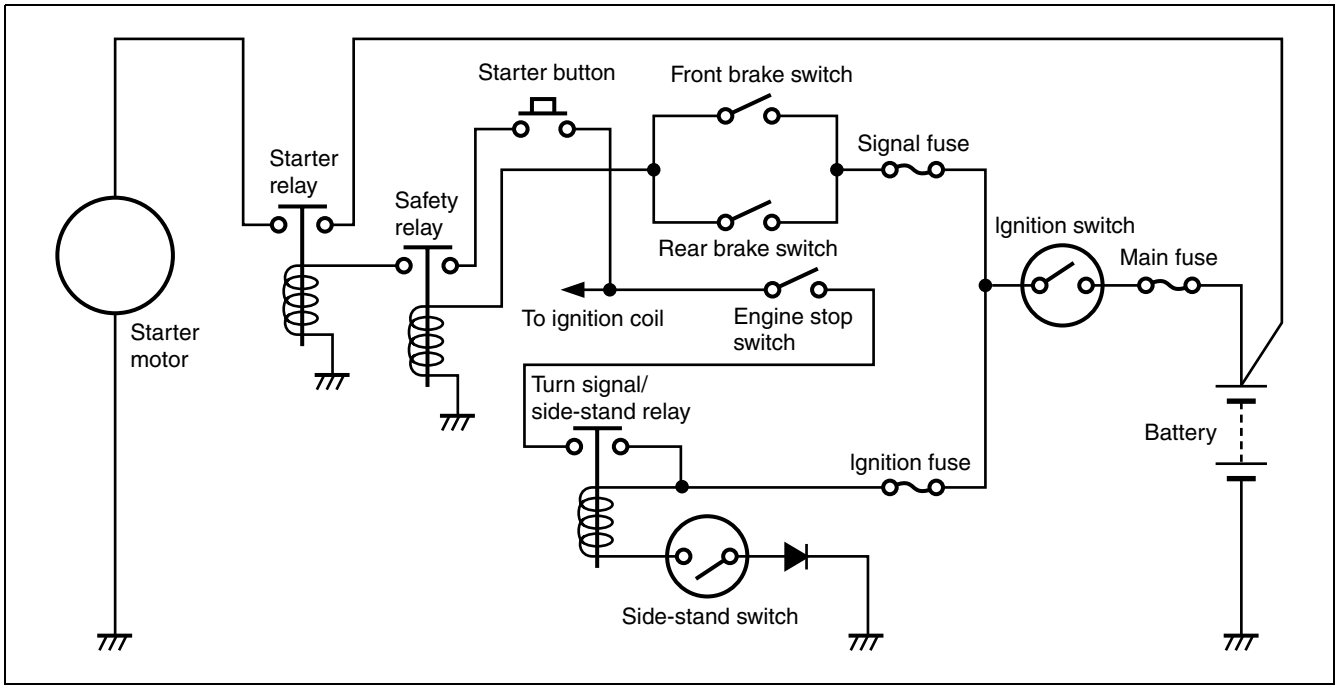

TROUBLE SHOOTING

NOTE:
Make sure the fuses are not blown and the battery is fully-charged before diagnosing.

Starter motor will not run.
Step1
1) Grasp the front or rear brake lever, turn on the ignition switch with the engine stop switch in the “RUN” position and side-stand switch in the “ON” position.
2) Listen for a click from the starter relay when the starter button is pushed.
   Is a click sound heard?

YES	Go to Step2.
NO	Go to Step3.

Step2
1) Check if the starter motor runs when its terminal is connected to the ⊕ battery terminal (Do not use a thin wire because a large amount of current flows.)
   Does the starter motor run?

YES	• Faulty starter relay. • Loose or disconnected starter motor lead wire. • Loose or disconnected between starter relay and ⊕ battery terminal.
NO	Faulty starter motor.

Step3

1) Measure the starter relay voltage at the starter relay connectors (between Y/G ⊕ and B/W ⊖) when the starter button is pushed.
   Is a voltage OK?

YES	Go to Step4.
NO	• Faulty safety relay. • Faulty starter button. • Faulty engine stop switch. • Faulty turn signal/side-stand relay. • Faulty ignition switch. • Faulty front brake switch and rear brake switch. • Faulty side-stand switch. • Improper connector contact. • Open circuit in wire harness.

Step4

1) Inspect the starter relay. (☞8-18)
   Is the starter relay OK?

YES	Poor starter relay connection.
NO	Faulty starter relay.

Engine does not turn though the starter motor runs.

- Faulty starter clutch.

STARTER MOTOR REMOVAL AND DISASSEMBLY

- Remove the trunk box. (☞7-18)
- Remove the air cleaner box. (☞3-4)
- Disconnect the starter motor lead wire ①.
- Remove the starter motor ②.

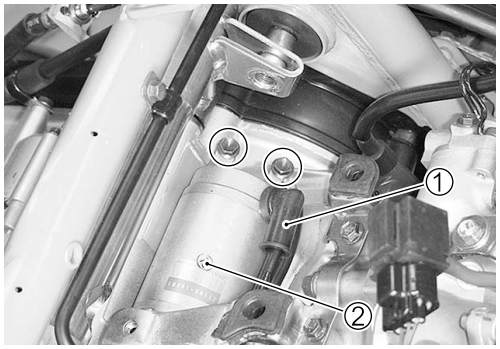

- Disassembly the starter motor, as shown.

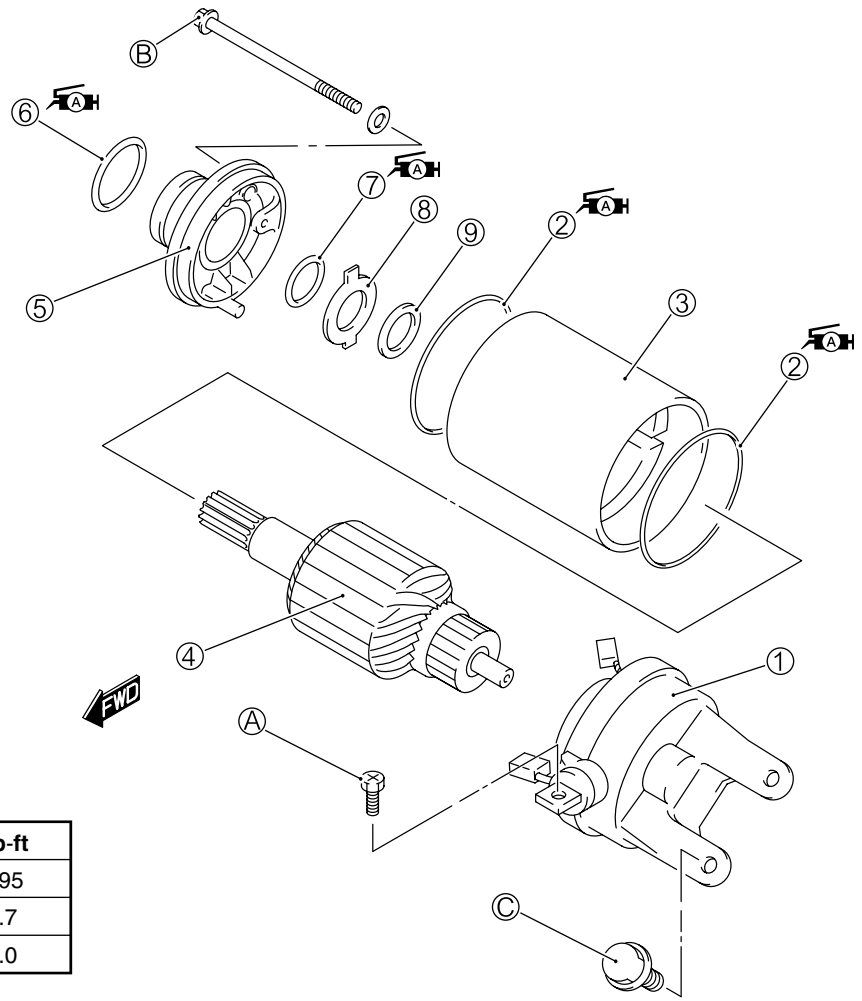

① Housing end (outside)
② O-ring
③ Starter motor case
④ Armature
⑤ Hausing end (inside)
⑥ O-ring
⑦ Oil seal
⑧ Washer
⑨ Shim

Ⓐ Starter motor lead wire bolt
Ⓑ Starter motor housing bolt
Ⓒ Starter motor mounting bolt

ITEM	N·m	kgf-m	lb-ft
Ⓐ	2.7	0.27	1.95
Ⓑ	3.7	0.37	2.7
Ⓒ	7	0.7	5.0

STARTER MOTOR INSPECTION

CARBON BRUSHES INSPECTION

- Inspect the carbon brushes for abnormal wear, cracks, or smoothness in the brush holder.
- If any damages are found, replace the brush assembly with a new one.

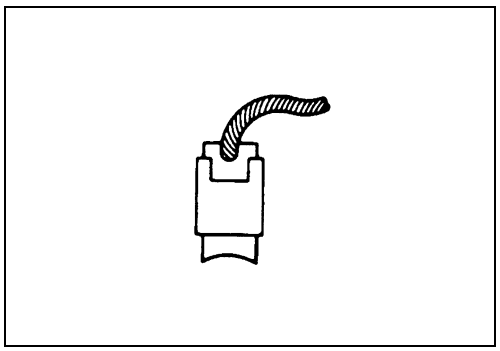

COMMUTATOR INSPECTION

- Inspect the commutator for discoloration, abnormal wear or undercut Ⓐ.
- If abnormal wear is found, replace the armature with a new one.
- If the commutator surfaced is discolored, polish it with #400 sandpaper and wipe it using a clean, dry cloth.
- If there is no undercut, scrape out the insulator ① with saw blade.

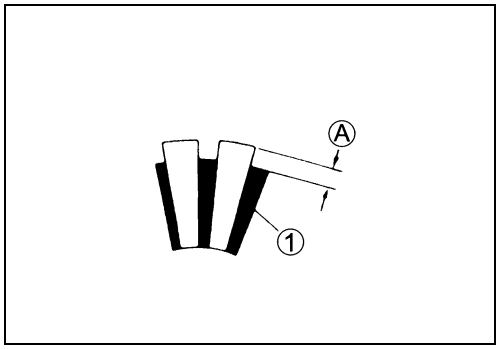

ARMATURE COIL INSPECTION

- Check for continuity between each segment and between each segment and the armature shaft using the multi circuit tester.
- If there is no continuity between the segments or there is continuity between the segments and shaft, replace the armature with a new one.

09900-25008: Multi circuit tester set

Tester knob indication: Continuity test (•)))

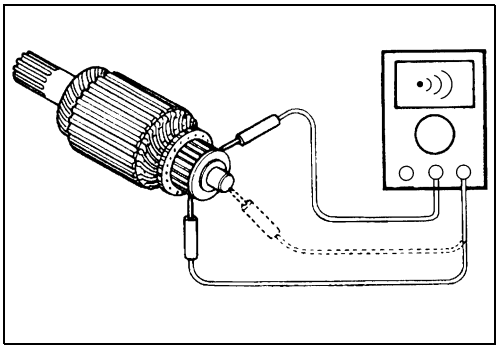

OIL SEAL INSPECTION

- Check the oil seal lip for damage or leakage.
- If any damage is found, replace the housing end.

BEARING INSPECTION

- Check the bearing of housing end for damage.
- If any damage is found, replace the housing end.

STARTER MOTOR REASSEMBLY AND INSTALLATION

Reassemble the starter motor in the reverse order of disassembly .Pay attention to the following points:

- Apply SUZUKI SUPER GREASE to the lip of the oil seal.

99000-25010: SUZUKI SUPER GREASE "A" (Others)
99000-25030: SUZUKI SUPER GREASE "A" (USA)

- Apply a little SUZUKI MOLY PASTE to the armature shaft end.

99000-25140: SUZUKI MOLY PASTE

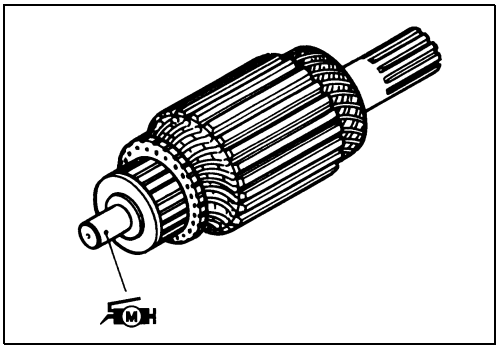

CAUTION

To prevent oil or water from entering into the motor inside, the O-rings must be replaced with new ones.

- Apply SUZUKI SUPER GREASE to the O-ring.

99000-25010: SUZUKI SUPER GREASE "A" (Others)
99000-25030: SUZUKI SUPER GREASE "A" (USA)

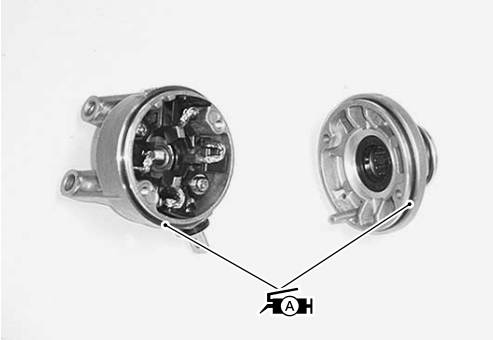

- Fit the washer ① to the housing end with the tab aligned with the housing end cutaway, position the shim ② and assemble the starter motor.

- Align the mark Ⓐ on the housing with the line Ⓑ on the housing end.

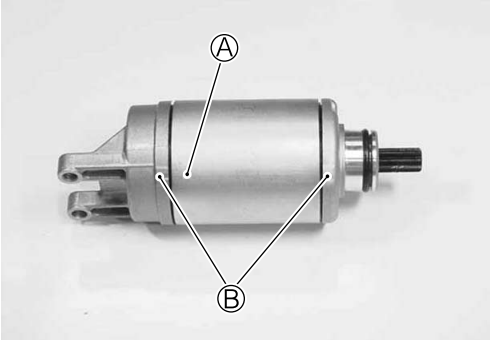

- Fit the O-rings to the starter motor housing bolts and tighten the bolts.

Starter motor housing bolt: 3.7 N·m (0.37 kgf-m, 2.7 lb-ft)

- Apply SUZUKI SUPER GREASE to the O-ring ③.

99000-25010: SUZUKI SUPER GREASE "A" (Others)
99000-25030: SUZUKI SUPER GREASE "A" (USA)

- Install the starter motor.

Starter motor mounting bolt: 7 N·m (0.7 Kgf-m, 5.0 lb-ft)

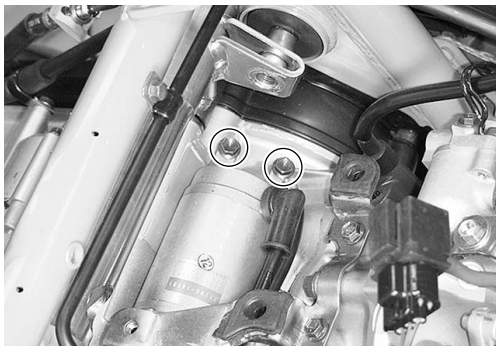

STARTER RELAY INSPECTION

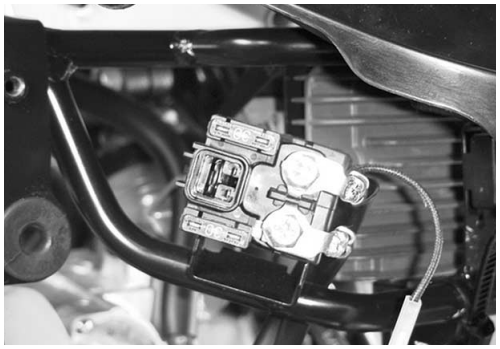

- Remove the front leg shield. (☞7-12)
- Disconnect the battery ⊖ lead wire.
- Remove the starter relay cover.
- Disconnect the starter motor read wire, battery ⊕ lead wire and starter relay coupler.
- Remove the starter relay.

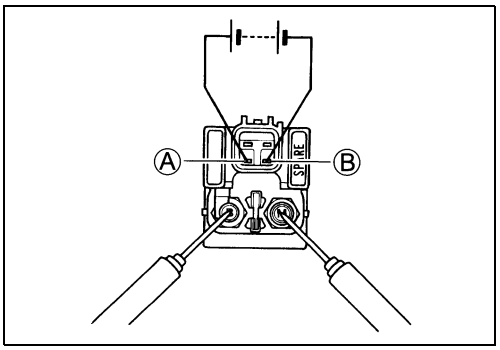

- Apply 12 V to Ⓐ and Ⓑ lead wires and check for continuity between the positive and negative terminals using the multi circuit tester. If the starter relay clicks and continuity is found, the relay is ok.

TOOL 09900-25008: Multi circuit tester set

Tester knob indication: Continuity test (•))))

> **Do not apply a battery voltage to the starter relay for more than five seconds, since the relay coil may overheat and damaged.**

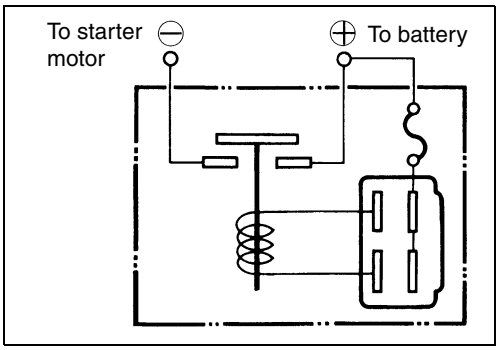

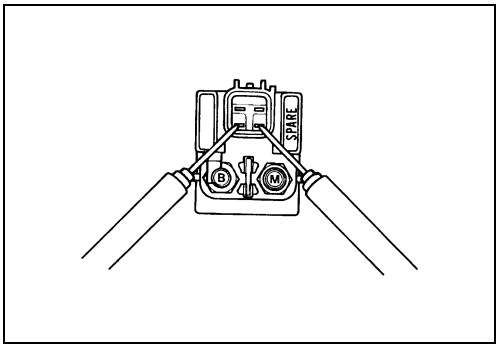

- Measure the relay coil resistance between the terminals using the multi circuit tester. If the resistance is not within the specified value, replace the starter relay with a new one.

TOOL 09900-25008: Multi circuit tester set

Tester knob indication: Resistance (Ω)

DATA Starter relay resistance: 3 – 6 Ω

SIDE-STAND/IGNITION INTERLOCK SYSTEM PARTS INSPECTION

Check the interlock system for proper operation. If the interlock system does not operate properly, check each component for damage or abnormalities. If any abnormality is found, replace the component with a new one.

SIDE-STAND SWITCH INSPECTION

- Remove the side leg shield. (☞7-15)
- Disconnect the side-stand switch coupler ①.
- Measure the voltage between green and Black/White lead wire.
  If the resistance is out of specification, replace the switch.

TOOL 09900-25008: Multi-circuit tester set

Tester knob indication: Diode test (⊣◀)

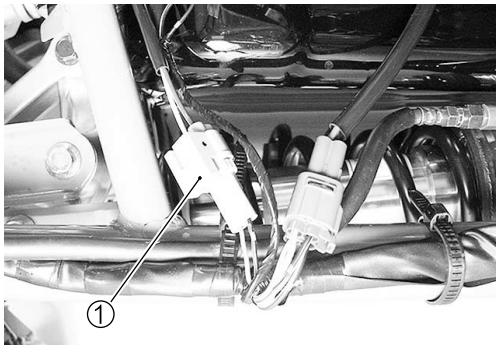

	Green (⊕ probe)	Black/White (⊖ probe)
ON (Side-stand up)	0.4 – 0.6 V	
OFF (Side-stand down)	1.4 V and more (Tester's battery voltage)	

NOTE:
If the tester reads under 1.4 V when the tester probes are not connected, replace its battery.

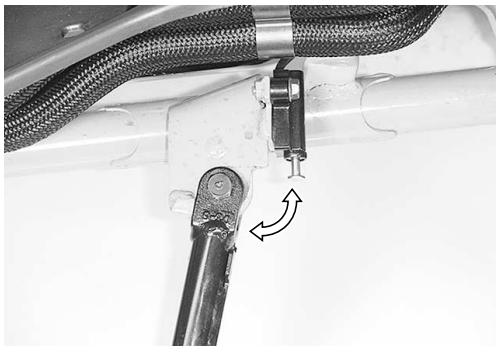

SAFETY RELAY INSPECTION

- Remove the front box. (☞7-14)
- Remove the safety relay ①.

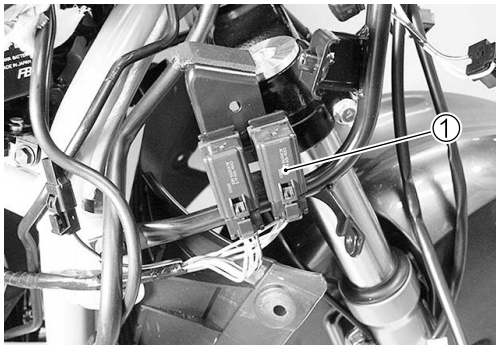

- Check that no continuity exists between the terminals Ⓐ and Ⓑ. If continuity is found, replace the relay.

TOOL 09900-25008: Multi-circuit tester set

Tester knob indication: Continuity test (•)))

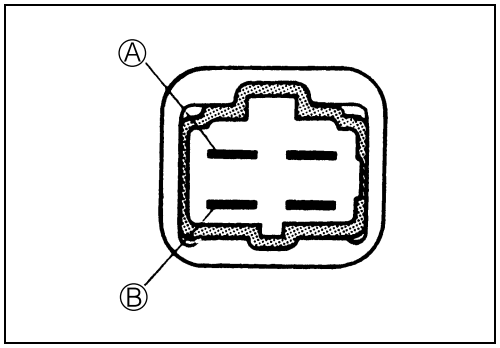

- Check there is continuity between the terminals Ⓐ and Ⓑ when 12V battery voltage is applied; positive to the terminal Ⓒ and negative to the terminal Ⓓ. If no continuity is noted, the relay must be replaced.

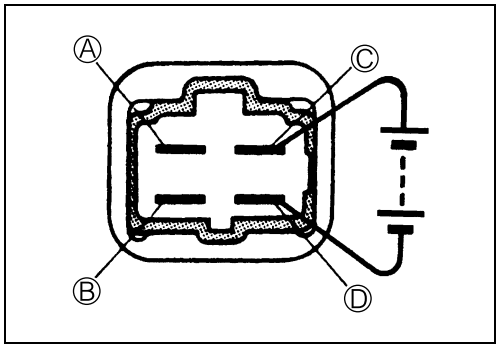

SIDE-STAND RELAY INSPECTION

NOTE:

The turn signal/side-stand relay is composed of the turn signal relay, the side-stand relay and diode.

- Remove the front leg shield. (☞7-12)
- Disconnect the turn signal/side-stand relay.

First check the insulation between Ⓑ and Ⓒ terminals with the tester. Then apply 12 V to terminals Ⓑ and Ⓐ (⊕ to Ⓑ and ⊖ to Ⓐ) and check the continuity between Ⓑ and Ⓒ. If there is no continuity, replace the turn signal/side-stand relay with a new one.

TOOL 09900-25008: Multi circuit tester set

Tester knob indication: Continuity test (•))))

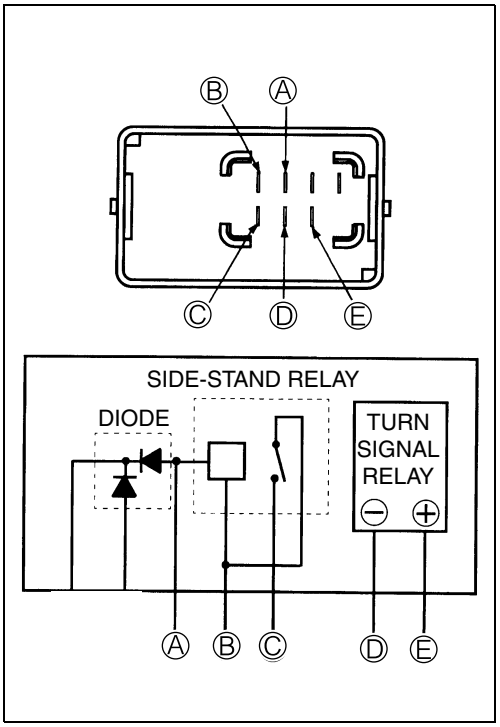

IGNITION SYSTEM

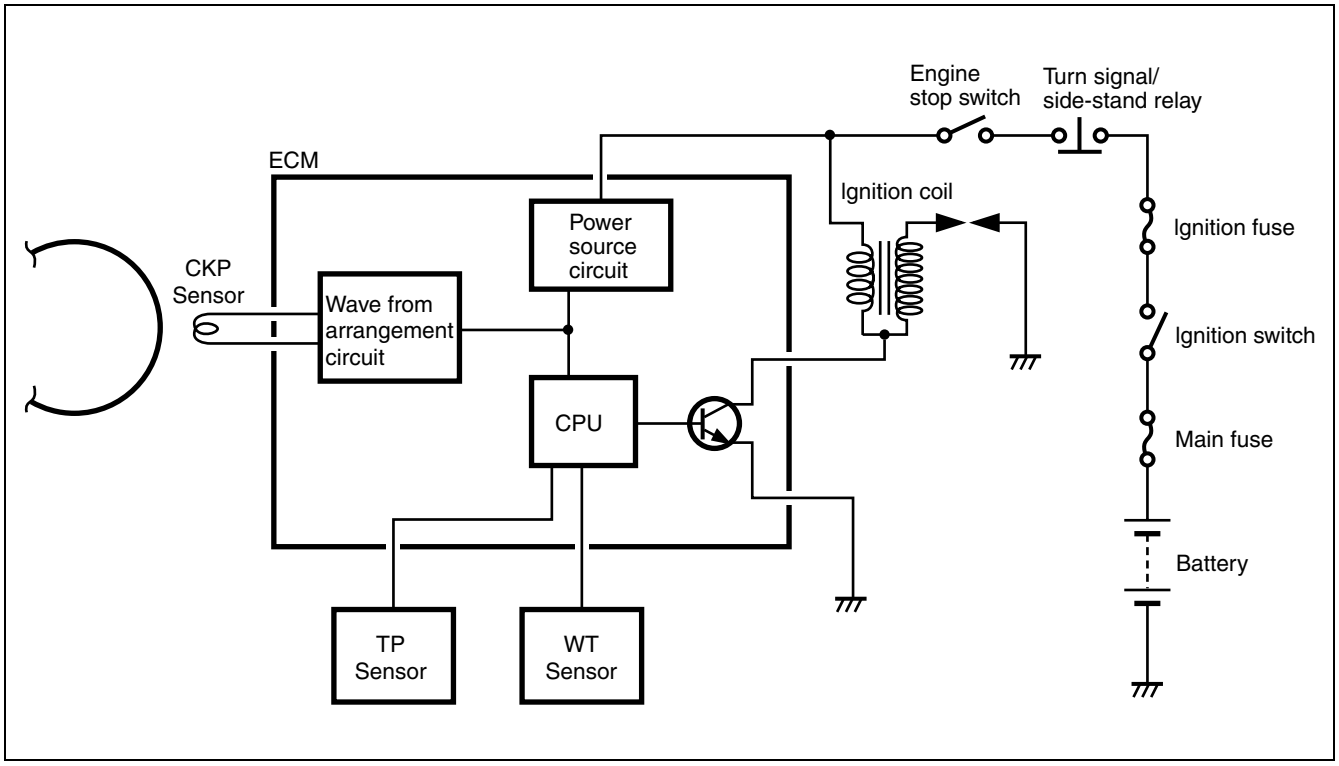

TROUBLESHOOTING

No spark or poor spark

NOTE:

Make sure the engine stop switch is in the "RUN" position and side-stand is in up-right position. Make sure the fuse is not blown and the battery is fully-charged before diagnosing.

Step1

1) Check ignition system couplers for poor connections.
   Is there connection in the ignition switch couplers?

YES	Go to Step2.
NO	Improper coupler connection.

Step 2

1) Measure the battery voltage between input lead wire (O/W and B/W) at the ECM with the ignition switch in the “ON” position.
   Is the voltage OK?

YES	Go to Step3.
NO	• Faulty ignition switch. • Faulty turn signal/side-stand switch relay. • Faulty ignition switch. • Broken wire harness or poor connection of related circuit couplers.

Step3

Measure the ignition coil primary peak voltage. (☞8-23)

NOTE:

The ignition coil peak voltage inspection method is applicable only with the multi circuit tester and peak volt adaptor.

Is the peak voltage OK?

YES	Go to Step4.
NO	Go to Step5.

Step4

1) Inspect the spark plug. (☞2-7)
   Is the spark plug OK?

YES	• Improper spark plug connection. • Go to Step5.
NO	Faulty spark plug.

Step5

1) Inspect the ignition coil. (☞8-24)
   Is the ignition coil OK?

YES	Go to Step6.
NO	Faulty ignition coil.

Step6

1) Measure the CKP sensor peak voltage and its resistance.

NOTE:

The CKP sensor peak voltage inspection is applicable only with the multi circuit tester and peak volt adaptor.

Is the peak voltage and resistance OK?

YES	• Faulty ECM. • Faulty wire harness. • Improper ignition coupler connection.
NO	Faulty CKP sensor.

IGNITION SYSTEM INSPECTION

IGNITION COIL PRIMARY PEAK VOLTAGE INSPECTION

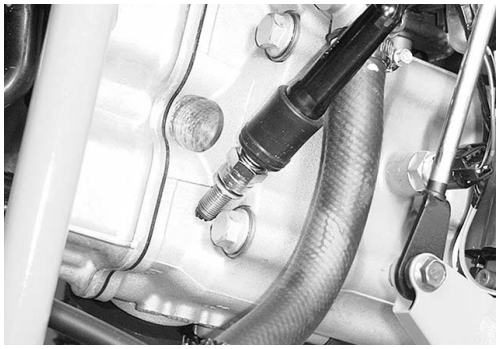

- Remove the foot board. (☞7-19)
- Disconnect spark plug cap.
- With the spark plug cap connected, place a new spark plug on the engine to ground it.

NOTE:
** Check that all the couplers are connected.*
** Check that the all battery is fully charged.*

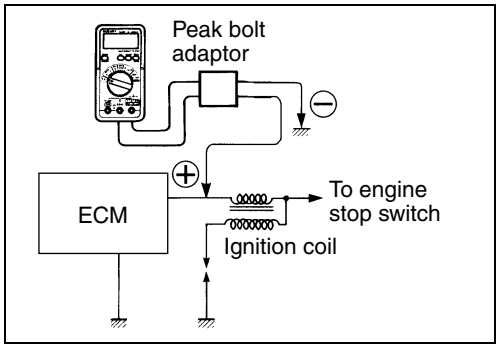

Measure the ignition coil primary peak voltage using the multi circuit tester in the following procedure.

- Connect the multi circuit tester with the peak volt adaptor as follows.

Ignition coil: ⊕ Probe: White lead wire connector
⊖ Probe: Ground

NOTE:
Do not disconnect the ignition coil/plug cap lead wire couplers.

TOOL 09900-25008: Multi circuit tester set

CAUTION

> **Before using the multi circuit tester and peak volt adaptor, be sure to refer to the appropriate instruction manual.**

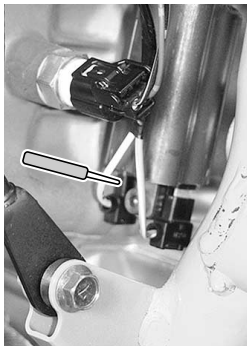

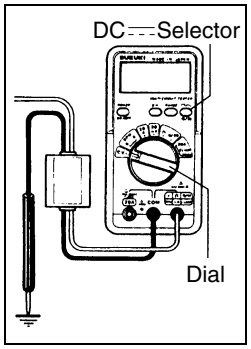

- Set the side-stand upright position, and then turn the ignition switch to the "ON" position.
- Grasp the front or rear brake lever.
- Press the starter button and allow the engine to crank for a few seconds, and then measure the ignition coil primary peak voltage.
- Repeat the above procedure a few times and measure the highest ignition coil primary peak voltage.

Tester knob indication: Voltage (⎓)

DATA Ignition coil primary peak voltage: 150 V and more

⚠ WARNING

> **While testing, do not touch the tester probes and spark plugs to prevent receiving an electric shock.**

If the peak voltage is lower than the specified values, inspect the ignition coil. (☞8-24)

IGNITION COIL RESISTANCE INSPECTION

- Remove foot board. (☞7-19)
- Disconnect the ignition coil read wire.

Measure the ignition coil resistance in both the primary and secondary windings. If the resistance is not within the standard range, replace the ignition coil with a new one.

TOOL 09900-25008: Multi circuit tester set

Tester knob indication: Resistance (Ω)

DATA Ignition coil/plug cap resistance

Primary : 3 – 5 Ω (⊕ Terminal – ⊖ Terminal)
Secondary: 17 – 30 kΩ (Plug cap – ⊕ Terminal)

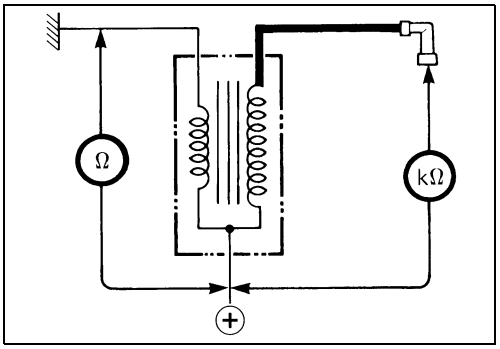

CKP SENSOR PEAK VOLTAGE INSPECTION

- Remove the front leg shield. (☞7-12)

NOTE:
When making this test, be sure that the battery is in fully charged condition.

- Disconnect the ECM coupler.
- With the lead wire's fastener Ⓐ un locked, pull out the lead wire (G/W, Bl).

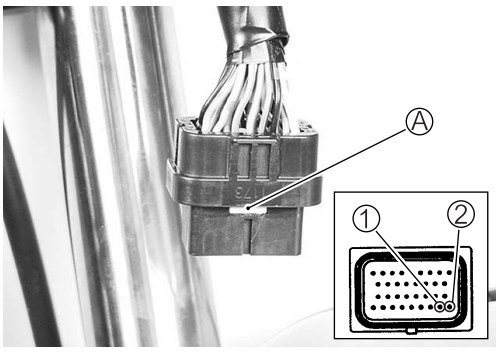

- Connect the multi circuit tester with the peak voltage adaptor as follows.
  - ⊕ Probe: Green/White lead wire
  - ⊖ Probe: Blue lead wire

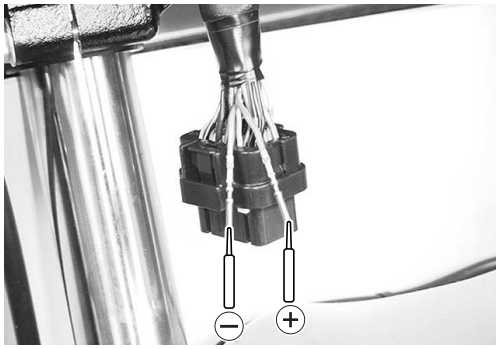

TOOL 09900-25008: Multi circuit tester set

CAUTION

> **Before using the multi circuit tester and peak volt adaptor, be sure to refer to the appropriate instruction manual.**

- Set the side-stand upright position, and then turn the ignition switch to the "ON" position.
- Grasp the front or rear brake.
- Pull the starter button and allow the engine to crank for a few seconds, and then measure the CKP sensor peak voltage.
- Repeat the above procedure a few times and measure the highest peak voltage.

Tester knob indication: voltage (⎓)

DATA CKP sensor peak voltage: 4.5 V and more

If the peak voltage is lower than the specified values, check the peak voltage at the CKP sensor lead wire coupler.

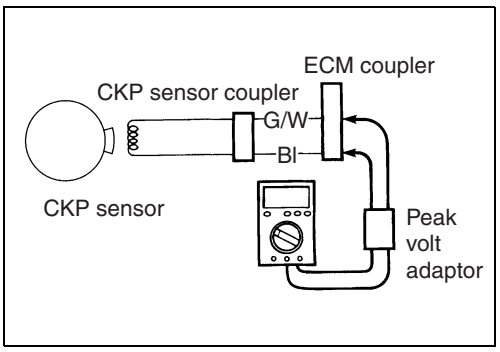

- Remove the front box. (☞7-14)
- Disconnect the CKP sensor coupler ① and connect the multi circuit tester with the peak volt adaptor.
  - ⊕ Probe: Green lead wire
  - ⊖ probe: Blue lead wire

Measure the CKP sensor peak voltage at the CKP sensor lead wire coupler, in the same manner as on the ECM coupler.

Tester knob indication: Voltage (⎓)

CKP sensor peak voltage: 4.5 V and more

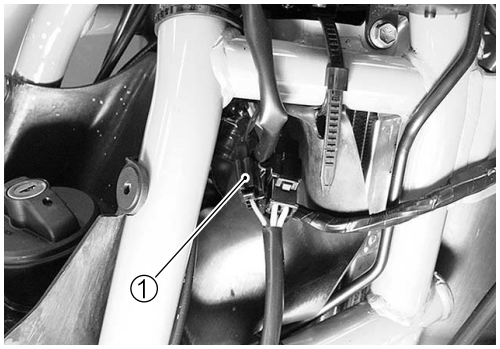

If the peak voltage on the CKP sensor lead wire coupler is ok but on the ECM coupler is out of specification, the wire harness must be replaced. If both peak voltages are out of specification, the CKP sensor must be replaced and re-checked.

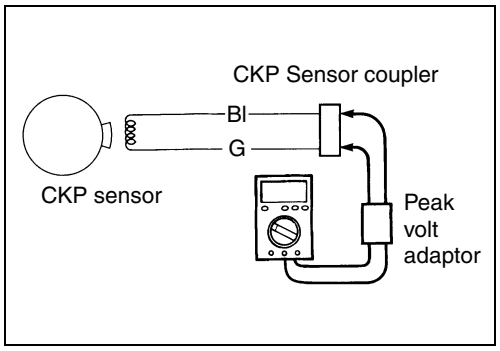

CKP SENSOR RESISTANCE INSPECTION

- Remove the front box. (☞7-14)
- Disconnect the CKP sensor coupler.

Measure the resistance between the lead wires and ground. If the resistance is not specified value, the CKP sensor must be replaced.

09900-25008: Multi circuit tester set

Tester knob indication: Resistance (Ω)

CKP sensor resistance : 180 – 288 Ω (Green – Blue)
: ∞ Ω (Green – Ground)

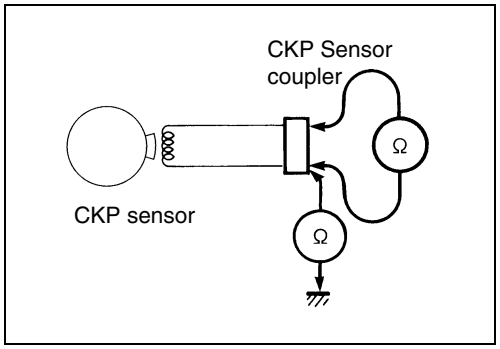

COMBINATION METER

REMOVAL AND DISASSEMBLY

- Remove the front meter panel. (☞7-13)
- Disassembly the combination meter, as shown.

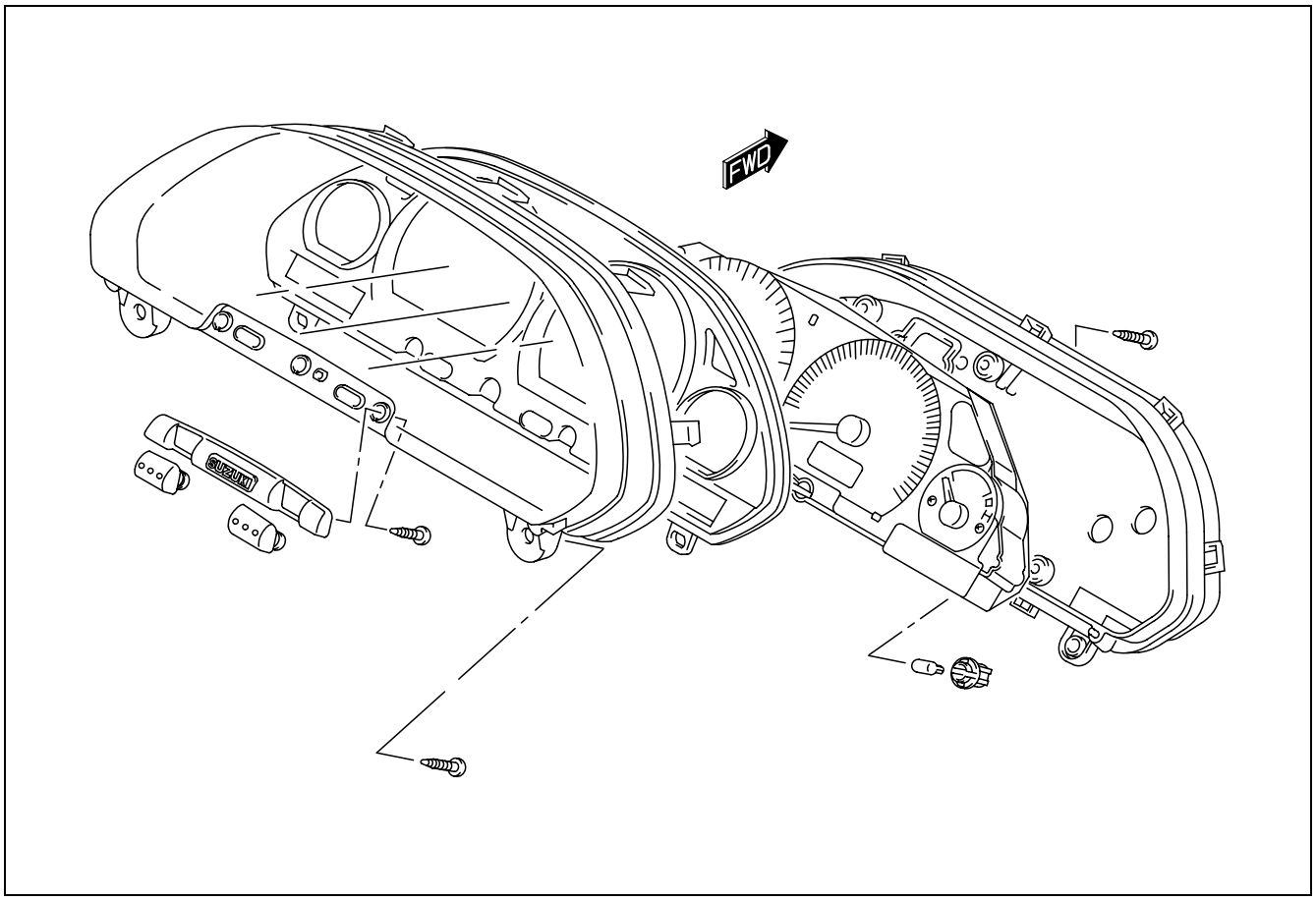

INSPECTION

WATER TEMPERATURE GAUGE INSPECTION

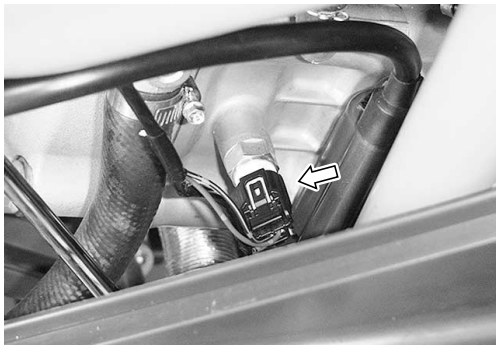

- For the inspection procedure. (☞6-9)
- Remove the frame cover. (☞7-18)
- Disconnect the water temperature sensor coupler.
- With the ignition switch turned on and a variable resister connected between the Dark green and Black/Brown lead wires for the water temperature gauge needle indication when the resistance is adjusted to the specified values.
  If the indication excessively deviates from the standard value, replace the meter with a new one.

Water temperature gauge needle indication			
Resistance Ω	Approx. 770 Ω	Approx. 155 Ω	Approx. 75 Ω
Needle position	①	②	③

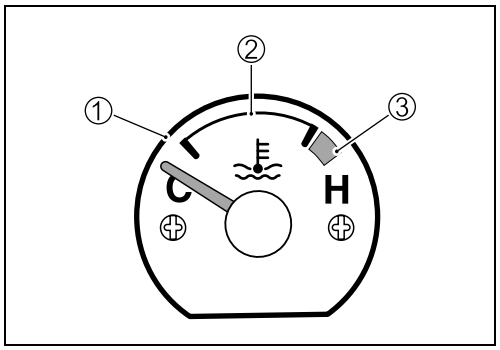

PEEDOMETER INSPECTION

If the speedometer, odometer or trip meter does not function properly, inspect the speedometer sensor and connection of coupler. If the speedometer sensor and connection are all right, replace the meter with a new one.

SPEED SENSOR INSPECTION

- Disconnect the speed sensor coupler.
- Connect 12 V battery, 10 kΩ resistance and the tester to the speed sensor lead coupler as shown.

09900-25008: Multi-circuit tester set

Tester knob indication: Voltage (⎓)

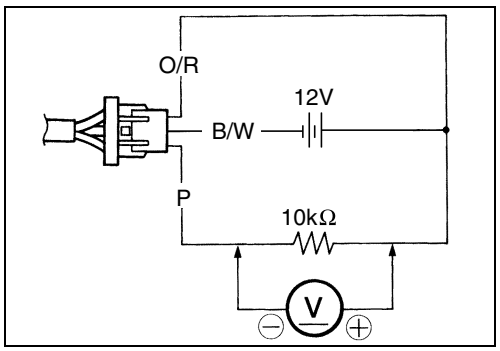

- Lift and turn the front wheel and check that voltage varies between 0 – 12 V.
- If any abnormal condition is noted, replace the sensor with a new one.

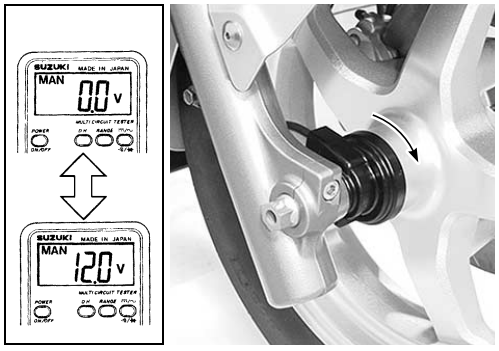

FUEL LEVEL METER INSPECTION

- Remove the side leg shield. (☞7-15)
- Disconnect the fuel pump coupler ①.

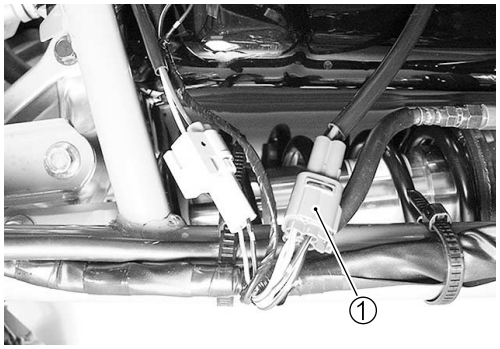

- Check that the fuel level meter moves properly when the resistor is connected between the fuel pump coupler terminals.
- If the indication excessively deviators from the standard value, replace the meter with a new one.

NOTE:

** Prior to this inspection, check that the fuel gauge is functioning properly.*

** When reading the meter indication, wait at least for 20 seconds after the resistor has been connected.*

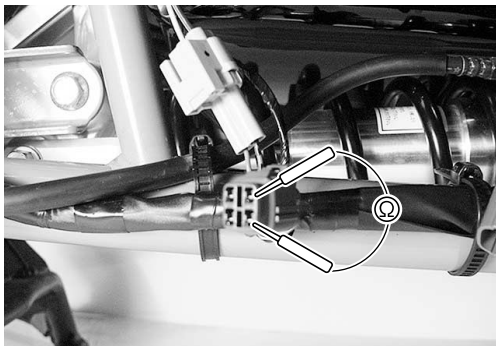

Resistor	Meter indication
Approx. 95 Ω	①
Approx. 51 Ω	②
Approx. 10 Ω	③

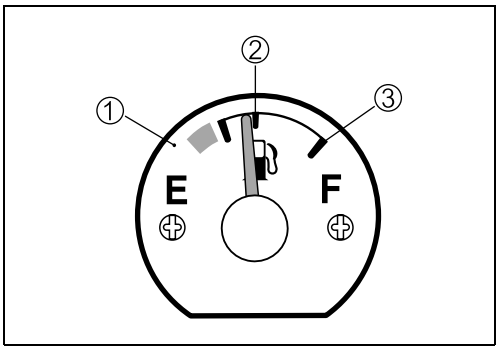

FUEL LEVELGAUGE INSPECTION

For the inspection procedure. (☞5-11)

LAMP
HEADLIGHT

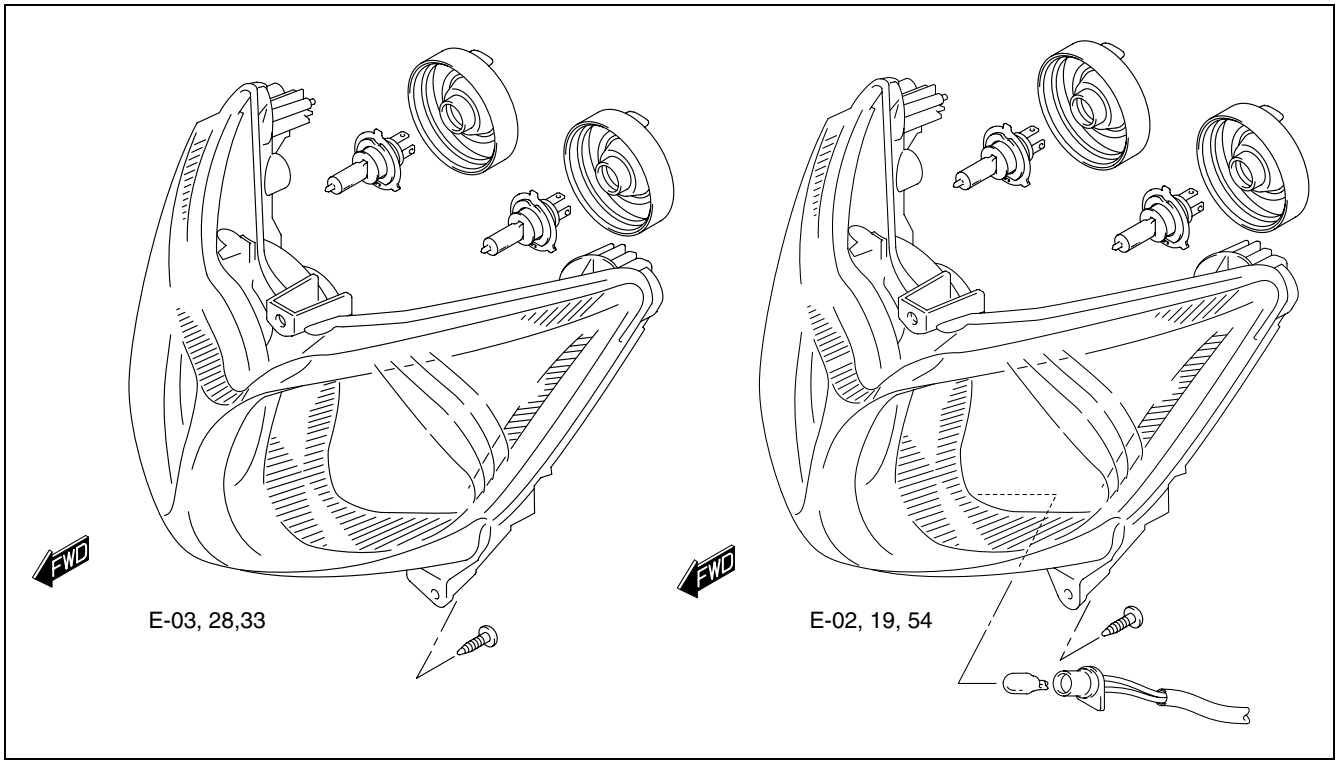

CAUTION

If you touch the bulb with your bare hands, clean the bulb with a cloth moistened with alcohol or soapy water to prevent premature bulb failure.

HEADLIGHT BULB REPLACEMENT

- Disconnect the lead wire couplers.
- Remove the headlight socket cover.
- Remove the headlight bulb ① by releasing the bulb spring ②.
- Install the headlight in the revers order of removal.

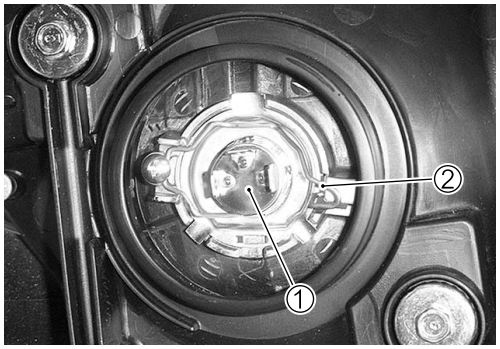

HEADLIGHT BEAM ADJUSUMENT

- Adjust the headlight beam, both vertical and horizontal.

Ⓐ Vertical adjuster (using a screw driver ⊕)
Ⓑ Horizontal adjuster (using a screw driver ⊕)

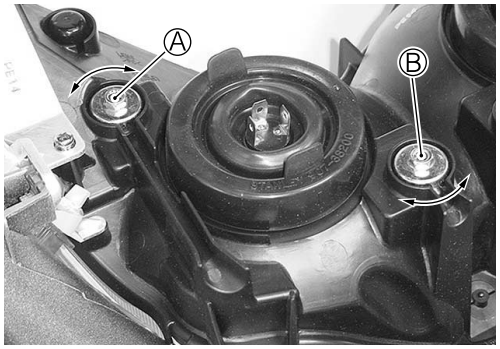

FRONT TURN SIGNAL LIGHT

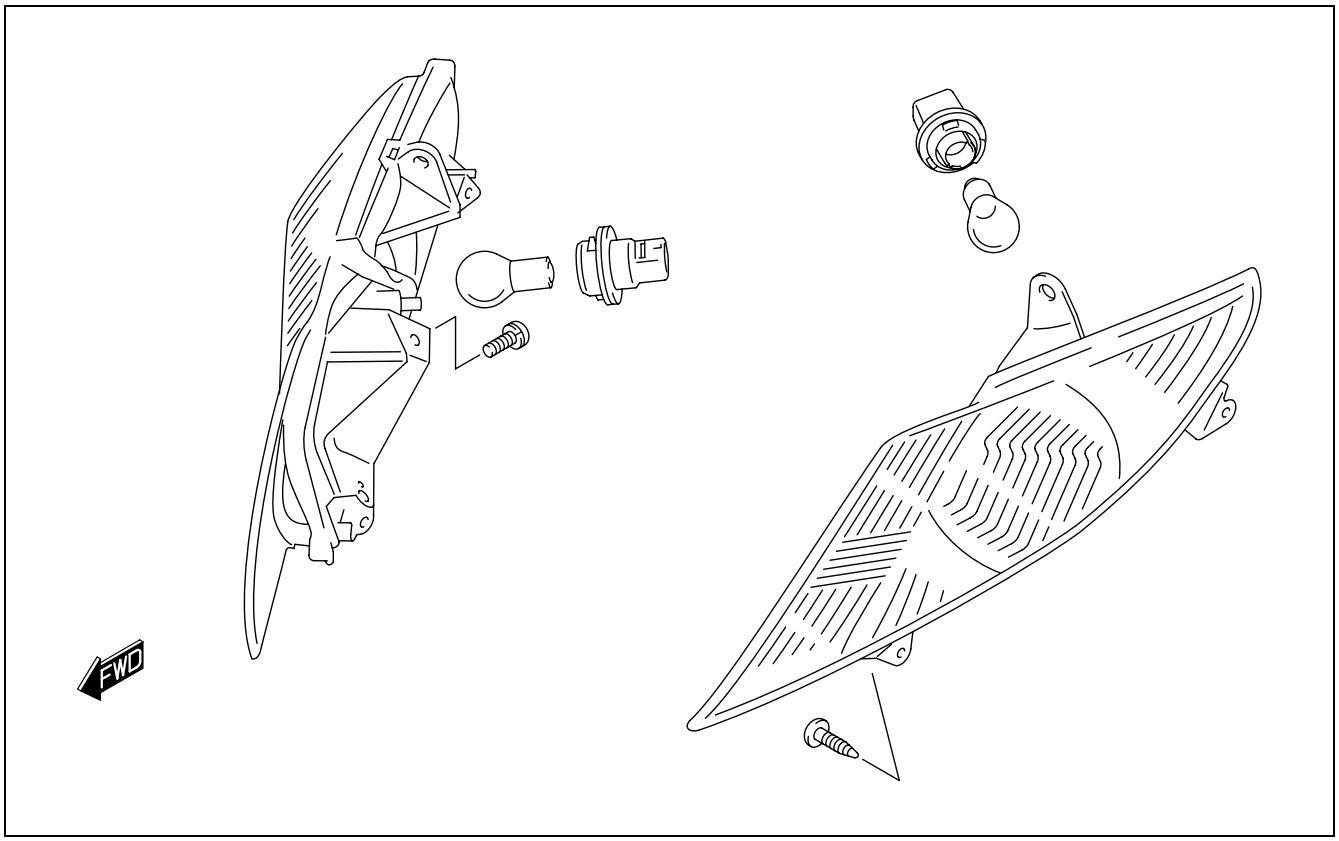

CAUTION

If you touch the bulb with your bare hands, clean the bulb with a cloth moistened with alcohol or soapy water to prevent premature bulb failure.

FRONT TURN SIGNAL LIGHT BULB REPLACEMENT

- Remove the front leg shield. (☞7-12)
- Remove the socket ①.
- Remove the bulb.
- Install the turn signal light in the reverse order of removal.

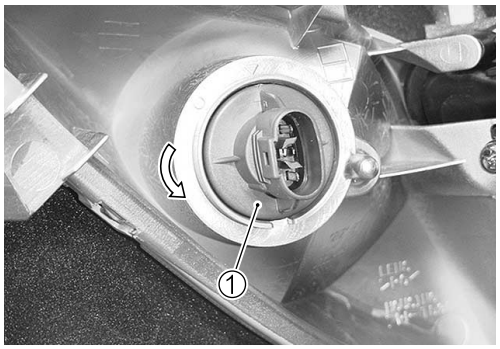

REAR TURN SIGNAL LIGHT/BRAKE LIGHT/TAILLIGHT/LICENSE LIGHT

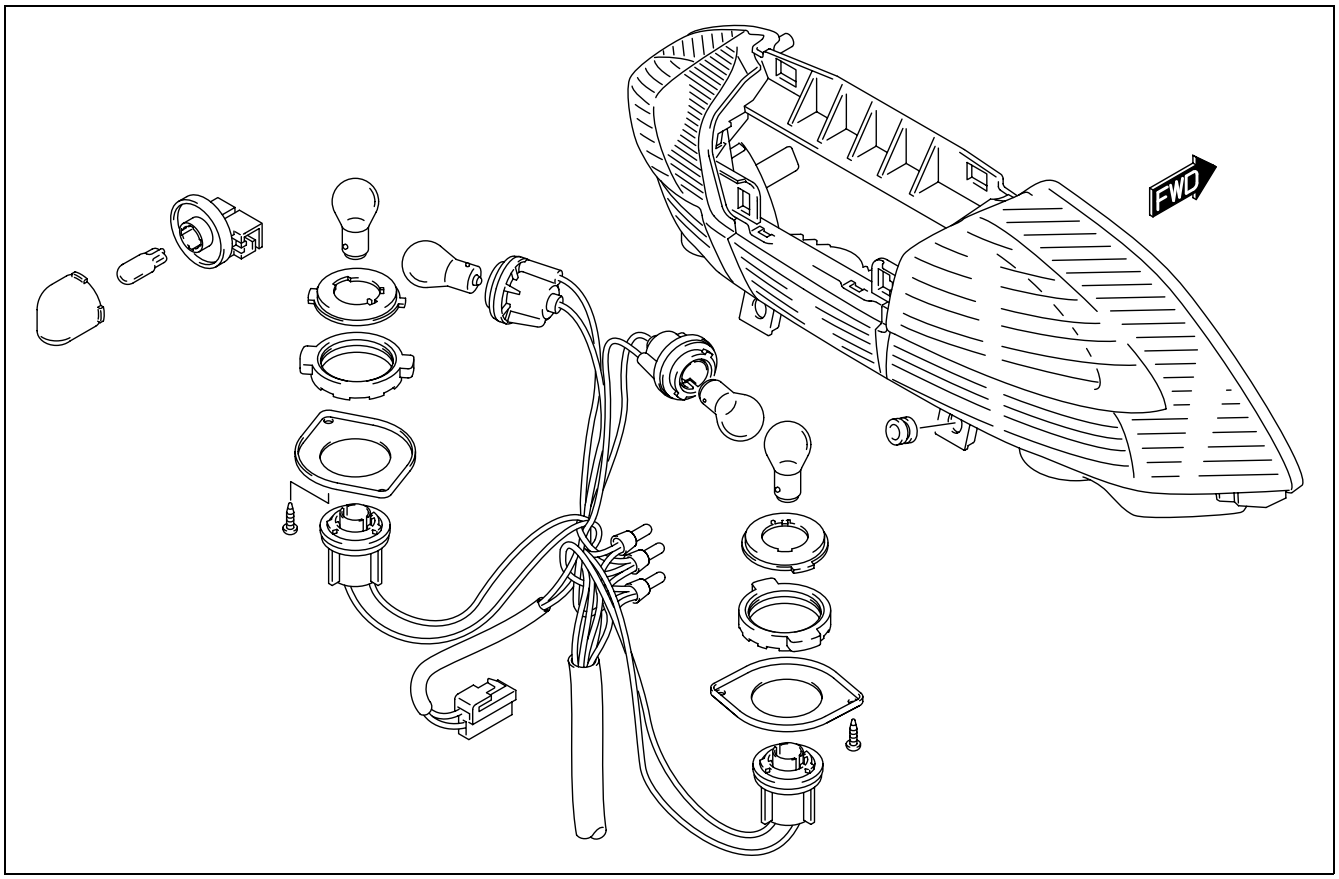

CAUTION

If you touch the bulb with your bare hands, clean the bulb with a cloth moistened with alcohol or soapy water to prevent premature bulb failure.

REAR TURN SIGNAL LIGHT BULB REPLACEMENT

- Remove the frame cover (center). (☞7-17)
- Remove the socket ①.
- Remove the bulb.
- Install the turn signal light in the reverse order of removal.

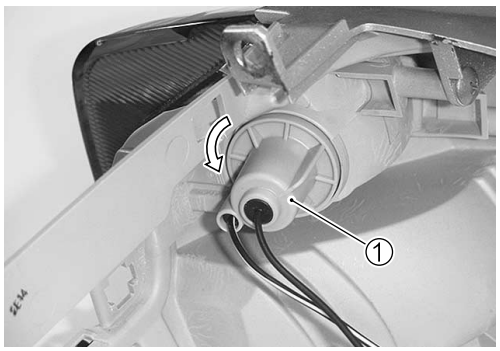

BRAKE LIGHT/TAILLIGHT REPLACEMENT

- Remove the lower frame cover. (☞7-15)
- Remove the socket ①.
- Remove the bulb.
- Install the brake light in the reverse order of removal.

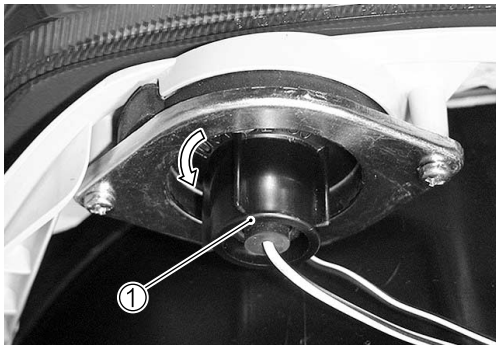

LICENSE LIGHT BULB REPLACEMENT

- Remove the lower frame cover. (☞7-15)
- Remove the lens ①.
- Remove the bulb ②.
- Install the license light in the reverse order of removal.

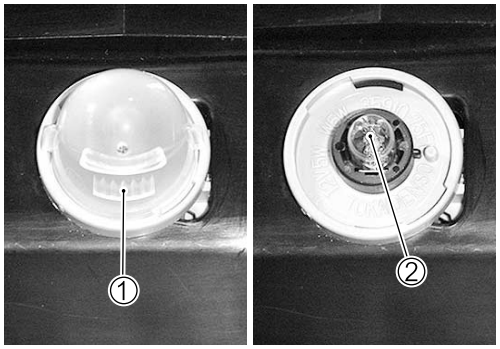

SWITCHES

IGNITION SWITCH REMOVAL AND REMOUNTING

- Remove the front box. (☞7-14)
- Disconnect the coupler.
- Loosen the nut ① and torx bolt ②.

TOOL 09930-11930: Torx bit (JT30H)
09930-11940: Bit holder

- Remount the ignition switch in the reverse order of removal.

Bolt, nut: 10 N·m (1.0 kgf-m, 7.0 lb-ft)

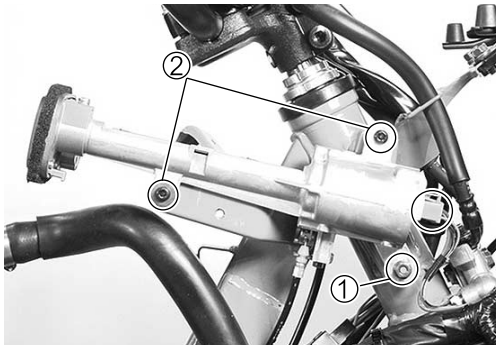

INSPECTION

Inspect each switch for continuity with a tester.
If any abnormality is found, replace the respective switch assemblies with new ones.

TOOL 09900-25008: Multi-circuit tester set

IGNITION SWITCH
For E-03, 28, 33

Position \ Color	R	O	O/Y	B/W	O/G	Br
ON	○	○	○	○	○	○
OFF						

IGNITION SWITCH
For Others

Position \ Color	R	O	O/Y	B/W	O/G	Br
ON	○	○	○	○	○	○
OFF						
P	○					○

DIMMER SWITCH

Position \ Color	O/R	Y	W
HI	○	○	
LO	○		○

TURN SIGNAL SWITCH

Position \ Color	Lg	Lbl	B
L		○	○
PUSH			
R	○	○	

PASSING LIGHT SWITCH

Position \ Color	O/R	Y
•		
PUSH	○	○

ENGINE STOP SWITCH

Position \ Color	O/B	O/W
OFF		
RUN	○	○

STARTER BUTTON

Position \ Color	O/W	Y/G
•		
PUSH	○	○

HORN BUTTON

Position \ Color	B/Bl	B/W
•		
PUSH	○	○

FRONT BRAKE SWITCH

Position \ Color	B/Bl	B/R
OFF		
ON	○	○

REAR BRAKE SWITCH

Position \ Color	B/R	B/G
OFF		
ON	○	○

HAZARD SWITCH
Except for E-03, 28, 33

Position \ Color	B	Lbl	Lg
OFF			
ON	○	○	○

BRAKE-LOCK SWITCH

Position \ Color	O/G	V
OFF		
ON	○	○

TRUNK LIGHT SEAT SWITCH

Position \ Color	B	B/W
•	○	○
PUSH		

BATTERY

SPECIFICATIONS

Type designation	FT12A-BS
Capacity	12 V, 36 kC (10 Ah)/10 HR

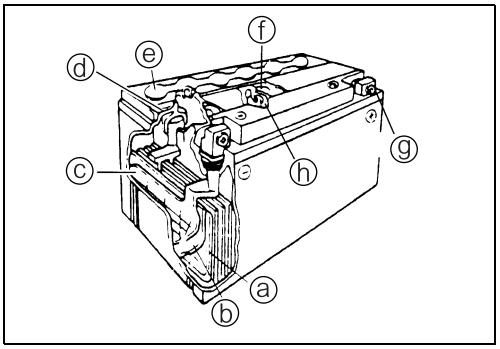

ⓐ Anode plates
ⓑ Separator (fiberglass plate)
ⓒ Cathode plates
ⓓ Upper cover breather
ⓔ Stopper
ⓕ Filter
ⓖ Terminal
ⓗ Safety valve

INITIAL CHARGING

FILLING ELECTROLYTE

- Remove the aluminum tape ① sealing the battery electrolyte filler holes ②.

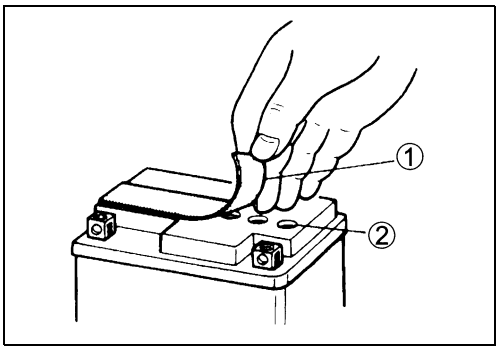

- Remove the caps ③.

NOTE:

** After filling the electrolyte completely, use the removed caps ③ as the sealed caps of battery filler holes.*

** Do not remove or pierce the sealed areas ④ of the electrolyte container.*

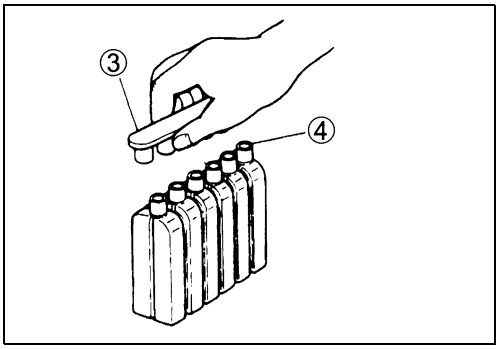

- Insert the nozzles of the electrolyte container ⑤ into the battery's electrolyte filler holes, holding the container firmly so that it does not fall. Take precaution not to allow any of the fluid to spill.

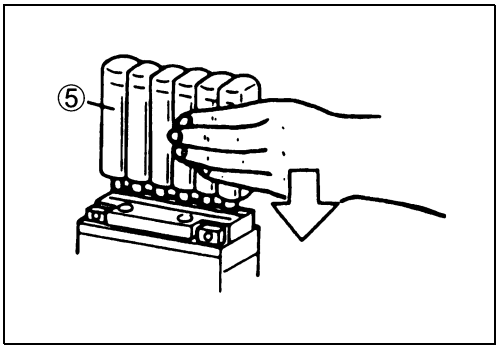

- Make sure air bubbles ⑥ are coming up each electrolyte container, and leave in this position for about more than 20 minutes.

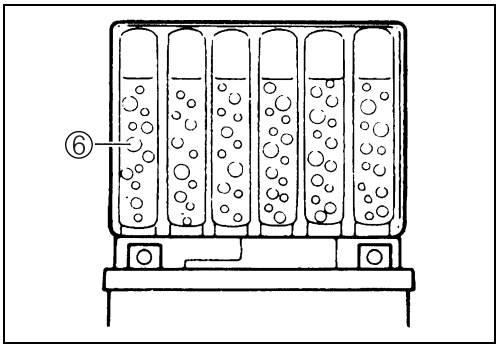

NOTE:
If on air bubbles are coming up from a filler port, tap the bottom of the electrolyte container two or three times.
Never remove the container from the battery.

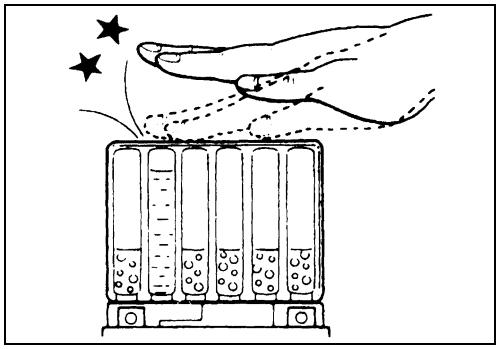

- After confirming that the electrolyte has entered the battery completely, remove the electrolyte containers from the battery. Wait for about more than 20 minutes.

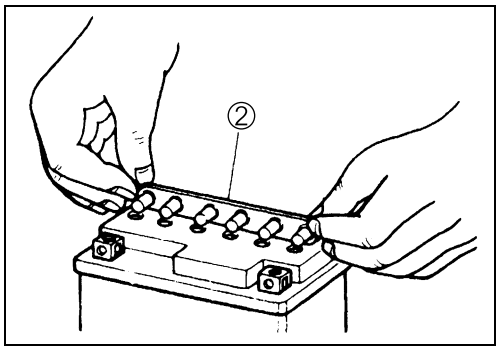

- Insert the caps ② into the filler holes, pressing in firmly so that the top of the caps do not protrude above the upper surface of the battery's top cover.

CAUTION

*** Never use anything except the specified battery.**
*** Once install the caps to the battery; do not remove the caps.**
*** Do not tap the caps with a hammer when installing them.**

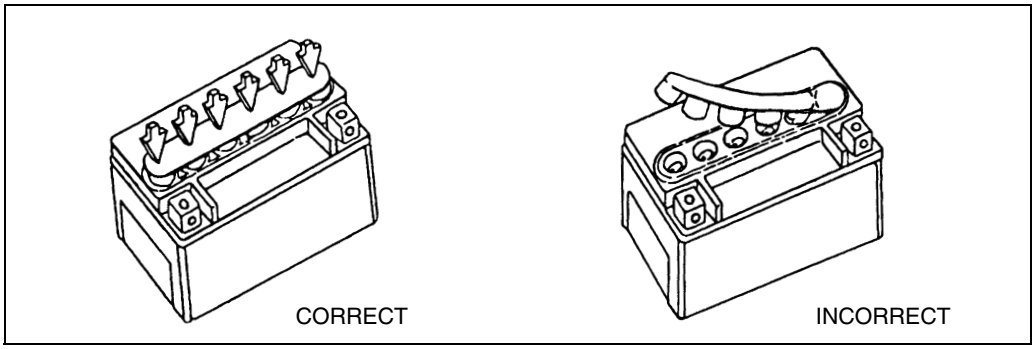

- For initial charging, use the charger specially designed for MF battery.

CAUTION

*** For charging the battery, make sure to use the charger specially designed for MF battery. Otherwise, the battery may be overcharged resulting in shortned service life.**
*** Do not remove the cap during charging.**
*** Position the battery with the cap facing upward during charging.**

SERVICING

Visually inspect the surface of the battery container. If any signs of cracking or electrolyte leakage from the sides of the battery have occurred, replace the battery with a new one. If the battery terminals are found to be coated with rust or an acidic white powdery substance, clean the battery terminals with sandpaper.

RECHARGING OPERATION

- Measure the battery voltage using the multi circuit tester. If the voltage reading is less than the 12 V (DC), recharge the battery with a battery charger.

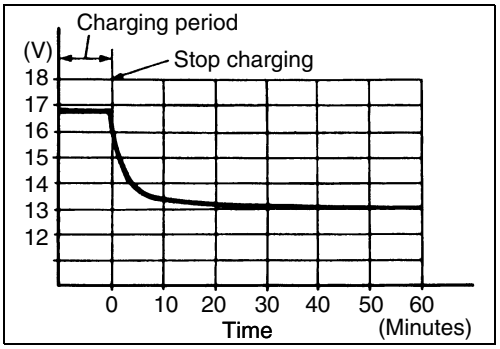

CAUTION

When recharging the battery, remove the battery from the motorcycle.

NOTE:
While recharging, do not remove the caps on the top of the battery.

Recharging time: 1.2 A for 5 to 10 hours or 5 A for 1 hour.

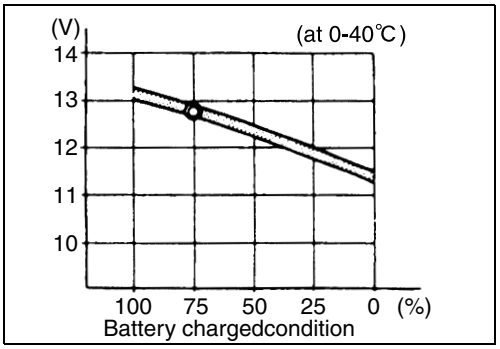

CAUTION

Be careful not to permit the charging current to exceed 6 A at any time.

- After recharging, wait at least 30 minutes and then measure the battery voltage using the multi circuit tester. If the battery voltage is less than 12.5 V, recharge the battery again. If the battery voltage is still less than 12.5 V after recharging, replace the battery with a new one.
- When a battery is left unused for a long time, its voltage needs to be regularly measured. When the motorcycle is not used for more than one month (especially during the winter season), measure the battery voltage at least once a month.

BATTERY REMOVAL

- Open the front trunk.
- Remove the battery cover ①.

- Disconnect the battery ⊖ lead ② first.
- Disconnect the battery ⊕ lead ③.
- Remove the battery.

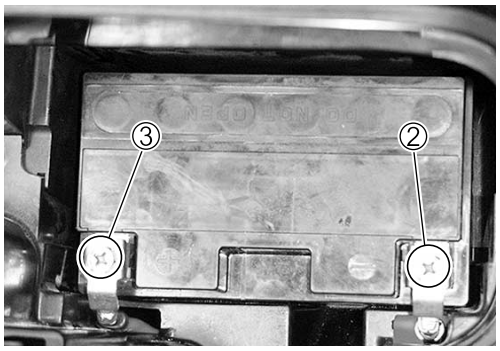

SERVICING INFORMATION

CONTENTS

TROUBLESHOOTING

MALFUNCTION CODE AND DEFECTIVE CONDITION

MALFUNCTION CODE	DETECTED ITEM	DETECTED FAILURE CONDITION CHECK FOR
C00	NO FAULT	————
C12	Crankshaft position sensor	The signal does not reach ECM for more than 3 sec. after receiving the starter signal. The crankshaft position sensor wiring and mechanical parts. (Crankshaft position sensor, wiring/coupler connection)
C13	Intake air pressure sensor	The sensor should produce for following voltage. (0.3 V ≦ sensor Voltage < 4.45 V) Without the above range, C13 is indicated. Intake air pressure sensor, wiring/coupler connection.
C14	Throttle position sensor	The sensor should produce following voltage. (0.45 V ≦ sensor voltage < 4.8 V) Without the above range, C14 is indicated. Throttle position sensor, wiring/coupler connection.
C15	Engine coolant temperature sensor	The sensor voltage should be the following. (0.2 V ≦ sensor voltage < 4.8 V) Without the above range, C15 is indicated. Engine coolant temperature sensor, wiring/coupler connection.
C21	Intake air temperature sensor	The sensor voltage should be the following. (0.2 V ≦ sensor voltage < 4.8 V) Without the above range, C21 is indicated. Intake air temperature sensor, wiring/coupler connection.
C23	Tip over sensor	The sensor voltage should be the following for more than 2 sec. after ignition switch turns ON. (0.4 V ≦ sensor voltage < 4.6 V) Without the above value, C23 is indicated. Tip over sensor, wiring/coupler connection.
C24	Ignition signal	Crankshart position sensor (pick-up coil) signal is produced but signal from ignition coil is interrupted continuous by 2 times or more. In this case, the code C24 is indicated. Ignition coil, wiring/coupler connection, power supply from the battery.
C32	Fuel injector	Crankshaft position sensor (pick-up coil) signal is produced but fuel injector signal is interrupted continuous by 2 times or more. In this case, the code C32 is indicated. Injector, wiring/coupler connection, power supply to the injector.
C40	Intake air control (IAC) valve	No IAC valve voltage is supplied after starting the engine. IAC valve, wiring/coupler connection.
C41	Fuel pump relay	No voltage is applied to fuel pump although fuel pump relay is turned ON, or voltage is applied to fuel pump although fuel pump relay is turned OFF. Fuel pump relay, connecting lead, power source to fuel pump relay.
C42	Ignition switch	Ignition switch signal is not input in the ECM. Ignition switch, lead wire/coupler.

C44	Heated oxygen sensor (HO2S) [E-02,19]	During O2 feedback control, O2 sensor voltage is higher than the specification or lower than the specification. No signal is detected during engine operation, or no electrical power is supplied from battery.
		HO2S lead wire/coupler connection. Battery voltage supply to the HO2S.

ENGINE

Complaint	Symptom and possible causes	Remedy
Engine will not start or is hard to start.	**Compression too low**	
	1. Valve clearance out of adjustment.	Adjust.
	2. Worn valve guides or poor seating of valves.	Repair or replace.
	3. Mistimed valves.	Adjust.
	4. Excessively worn piston rings.	Replace.
	5. Worn-down cylinder bore.	Replace.
	6. Starter motor cranks too slowly.	See electrical section.
	7. Poor seating of spark plug.	Retighten.
	8. Decomp cam not working.	Repair or replace.
	Plug not sparking	
	1. Fouled spark plug.	Clean.
	2. Wet spark plug.	Clean and dry.
	3. Defective ignition coil.	Replace.
	4. Open or short in high-tension cord.	Replace.
	5. Defective crankshaft position sensor.	Replace.
	6. Defective ECM.	Replace.
	7. Open-circuited wiring connections.	Repair or Replace.
	8. Defective spark plug.	Replace.
	9. Defective spark plug cap.	Replace.
	No fuel reaching the intake manifold	
	1. Clogged fuel filter or fuel hose.	Clean or replace.
	2. Defective fuel pump.	Replace.
	3. Defective fuel pressure regulator.	Replace.
	4. Defective fuel injector.	Replace.
	5. Defective fuel pump relay.	Replace.
	6. Defective ECM.	Replace.
	7. Open-circuited wiring connections.	Check and repair.
	Incorrect fuel/air mixture	
	1. Throttle position sensor out of adjustment.	Adjust.
	2. Defective fuel pump.	Replace.
	3. Defective fuel pressure regulator.	Replace.
	4. Defective throttle position sensor.	Replace.
	5. Defective crankshaft position sensor.	Replace.
	6. Defective intake air pressure sensor.	Replace.
	7. Defective ECM.	Replace.
	8. Defective engine coolant temperature sensor.	Replace.
	9. Defective intake air temperature sensor.	Replace.

Complaint	Symptom and possible causes	Remedy
Engine idles poorly.	1. Valve clearance out of adjustment.	Adjust.
	2. Poor seating of valves.	Replace or repair.
	3. Defective valve guides.	Replace.
	4. Worn down camshaft.	Replace.
	5. Too wide spark plug gap.	Adjust or replace.
	6. Defective ignition coil.	Replace.
	7. Defective crankshaft position sensor.	Replace.
	8. Defective ECM.	Replace.
	9. Defective throttle position sensor.	Replace.
	10. Defective fuel pump.	Replace.
	11. Damaged or cracked vacuum hose.	Replace.
	12. Defective IAC valve.	Replace.
Engine stalls often.	**Incorrect fuel/air mixture**	
	1. Defective intake air pressure sensor or circuit.	Repair or replace.
	2. Clogged fuel filter.	Clean or replace.
	3. Defective fuel pump.	Replace.
	4. Defective fuel pressure regulator.	Replace.
	5. Damaged or cracked vacuum hose.	Replace.
	6. Defective engine coolant temperature sensor.	Replace.
	7. Defective thermostat.	Replace.
	8. Defective intake air temperature sensor.	Replace.
	Fuel injector improperly operating	
	1. Defective fuel injector.	Replace.
	2. No injection signal from ECM.	Repair or Replace.
	3. Open or short circuited wiring connection.	Repair or Replace.
	4. Defective battery or low battery voltage.	Replace or recharge.
	Control circuit or sensor improperly operating	
	1. Difective ECM.	Replace.
	2. Defective fuel pressure regulator.	Replace.
	3. Defective throttle position sensor.	Replace.
	4. Defective intake air temperature sensor.	Replace.
	5. Defective crankshaft position sensor.	Replace.
	6. Defective engine coolant temperature sensor.	Replace.
	7. Defective fuel pump relay.	Replace.
	Engine parts improperly operating	
	1. Fouled spark plug.	Clean.
	2. Defective crankshaft position sensor or ECM.	Replace.
	3. Clogged fuel hose.	Clean.
	4. Valve clearance out of adjustment.	Adjust.

Complaint	Symptom and possible causes	Remedy
Noisy engine.	**Excessive valve chatter**	
	1. Too large valve clearance.	Adjust.
	2. Weakened or broken valve springs.	Replace.
	3. Worn rocker arm or cam surface.	Replace.
	4. Worn and burnt camshaft journal.	Replace.
	Noise seems to come from piston	
	1. Worn down piston or cylinder.	Replace.
	2. Combustion chamber fouled with carbon.	Clean.
	3. Worn piston pins or piston pin bore.	Replace.
	4. Worn piston rings or ring grooves.	Replace.
	Noise seems to come from timing chain	
	1. Stretched chain.	Replace.
	2. Worn sprocket.	Replace.
	3. Tension adjuster not working.	Repair or replace.
	Noise seems to come from crankshaft	
	1. Rattling bearings due to wear.	Replace.
	2. Worn and burnt journal bearings.	Replace.
	3. Too large thrust clearance.	Replace bearing.
	Noise seems to come from transmission	
	1. Worn or rubbing gears.	Replace.
	2. Worn splines.	Replace.
	3. Worn bearings.	Replace.
	Noise seems to come from water pump	
	1. Too much play on water pump shaft bearing.	Replace.
	2. Worn or damaged impeller shaft.	Replace.
	3. Worn or damaged mechanical seal.	Replace.
	4. Contact between water pump case and impeller.	Replace.
Engine runs poorly in high speed range.	**Defective engine internal/electrical parts**	
	1. Weakened valve springs.	Replace.
	2. Worn camshaft.	Replace.
	3. Valve timing out of adjustment.	Adjust.
	4. Incorrect spark plug gap.	Adjust.
	5. Ignition not advanced sufficiently due to poorly working timing advance circuit.	Replace ECM.
	6. Defective ignition coil.	Replace.
	7. Defective crankshaft position sensor.	Replace.
	8. Defective ECM.	Replace.
	9. Clogged air cleaner element.	Clean.
	10. Clogged fuel hose, resulting in inadequate fuel supply to injector.	Clean and prime.
	11. Defective fuel pump.	Replace.
	12. Defective throttle position sensor.	Replace.

Complaint	Symptom and possible causes	Remedy
Engine runs poorly in high speed range.	**Defective air flow system**	
	1. Clogged air cleaner element.	Clean or replace.
	2. Defective throttle valve.	Adjust or replace.
	3. Defective IAC valve.	Replace.
	4. Sucking air from throttle body joint.	Repair or replace.
	Defective control circuit or sensor	
	1. Low fuel pressure.	Repair or replace.
	2. Defective throttle position sensor.	Replace.
	3. Defective intake air temperature sensor.	Replace.
	4. Defective crankshaft position sensor.	Replace.
	5. Defective intake air pressure sensor.	Replace.
	6. Defective ECM.	Replace.
	7. Throttle position sensor out of adjustment.	Adjust.
	8. Defective fuel tank pressure control valve.	Replace.
Engine lacks power.	**Defective engine internal/electrical parts**	
	1. Loss of valve clearance.	Adjust.
	2. Weakened valve springs.	Replace.
	3. Valve timing out of adjustment.	Adjust.
	4. Worn piston rings or cylinder.	Replace.
	5. Poor seating of valves.	Repair.
	6. Fouled spark plug.	Clean or replace.
	7. Incorrect spark plug.	Adjust or replace.
	8. Clogged injector.	Clean.
	9. Throttle position sensor out of adjustment.	Adjust.
	10. Clogged air cleaner element.	Clean.
	11. Sucking air from throttle valve or vacuum hose.	Retighten or replace.
	12. Too much engine oil.	Drain out excess oil.
	13. Defective fuel pump or ECM.	Replace.
	14. Defective crankshaft position sensor and ignition coil.	Replace.
	Defective control circuit or sensor	
	1. Low fuel pressure.	Repair or replace.
	2. Defective throttle position sensor.	Replace.
	3. Defective intake air temperature sensor.	Replace.
	4. Defective crankshaft position sensor.	Replace.
	5. Defective intake air pressure sensor.	Replace.
	6. Defective ECM.	Replace.
	7. Throttle position sensor out of adjustment.	Adjust.

Complaint	Symptom and possible causes	Remedy
Engine overheats.	**Defective engine internal parts**	
	1. Heavy carbon deposit on piston crowns.	Clean.
	2. Not enough oil in the engine.	Add oil.
	3. Defective oil pump or clogged oil circuit.	Replace or clean.
	4. Sucking air from intake pipe.	Retighten or replace.
	5. Use of incorrect engine oil.	Change.
	6. Defective cooling system.	Consult radiator section.
	Lean fuel/air mixture	
	1. Short-circuited intake air pressure sensor/lead wire.	Repair or replace.
	2. Short-circuited intake air temperature sensor/lead wire.	Repair or replace.
	3. Sucking air from intake pipe joint.	Repair or replace.
	4. Defective fuel injector.	Replace.
	5. Defective engine coolant temperature sensor.	Replace.
	The other factors	
	1. Ignition timing too advanced due to defective timing advance system(engine coolant temperature sensor, crankshaft position sensor and ECM.)	Replace.
Dirty or heavy exhaust smoke.	1. Too much engine oil in the engine.	Check with inspection window. Drain excess oil.
	2. Worn piston rings or cylinder.	Replace.
	3. Worn valve guides.	Replace.
	4. Scored or scuffed cylinder walls.	Replace.
	5. Worn valves stems.	Replace.
	6. Defective stem seals.	Replace.
	7. Worn oil ring side rails.	Replace.
Slipping clutch.	1. Worn clutch shoe.	Replace.
	2. Centrifugal weight not working.	Replaie or replace.

RADIATOR (COOLING SYSTEM)

Complaint	Symptom and possible causes	Remedy
Engine overheats.	1. Not enough engine coolant.	Add engine coolant.
	2. Radiator core clogged with dirt or scale.	Clean.
	3. Defective cooling fan.	Repair or replace.
	4. Defective cooling fan thermo-switch.	Replace.
	5. Clogged water passage.	Clean.
	6. Air trapped in the cooling circuit.	Bleed air.
	7. Defective water pump.	Replace.
	8. Use of incorrect engine coolant.	Replace.
	9. Defective thermostat.	Replace.
Engine overcools.	1. Defective cooling fan thermo-switch.	Replace.
	2. Extremely cold weather.	Put on radiator cover.
	3. Defective thermostat.	Replace.

CHASSIS

Complaint	Symptom and possible causes	Remedy
Heavy steering.	1. Over tightened steering stem nut. 2. Broken bearing in steering stem. 3. Distorted steering stem. 4. Not enough pressure in tires.	Adjust. Replace. Replace. Adjust.
Wobbly handlebars.	1. Loss of balance between right and left front forks. 2. Distorted front fork. 3. Distorted front axle or crooked tire. 4. Loose steering stem nut. 5. Worn or incorrect tire or wrong tire pressure. 6. Worn bearing/race in steering stem.	Replace. Repair or replace. Replace. Adjust. Adjust or replace. Replace.
Wobbly front wheel.	1. Distorted wheel rim. 2. Worn front wheel bearings. 3. Defective or incorrect tire. 4. Loose front axle or pinch bolt. 5. Incorrect front fork oil level.	Replace. Replace. Replace. Retighten. Adjust.
Front suspension too soft.	1. Weakened springs. 2. Not enough fork oil. 3. Wrong viscous fork oil.	Replace. Replenish. Replace.
Front suspension too stiff.	1. Too viscous fork oil. 2. Too much fork oil. 3. Bent front axle.	Replace. Drain excess oil. Replace.
Noisy front suspen-sion.	1. Not enough fork oil. 2. Loose bolts of suspension.	Replenish. Retighten.
Wobbly rear wheel.	1. Distorted wheel rim. 2. Defective or incorrect tire. 3. Loose nuts or bolts on rear suspension.	Replace. Replace. Retighten.
Rear suspension too soft.	1. Weakened spring of shock absorber. 2. Leakage of oil from shock absorber. 3. Improperly set rear spring unit adjuster.	Replace. Replace. Adjust.
Rear suspension too stiff.	1. Bent shock absorber shaft. 2. Over tightened cushion lever mounting nut 3. Worn cushion lever bearings. 4. Improperly set rear suspension adjuster.	Replace. Tighten to specified torque. Replace. Adjust.
Noisy rear suspen-sion.	1. Loose nuts or bolts on rear suspension. 2. Worn cushion lever bearings.	Retighten. Replace.

BRAKES

Complaint	Symptom and possible causes	Remedy
Insufficient brake power.	1. Leakage of brake fluid from hydraulic system. 2. Worn pads. 3. Oil adhesion on friction surface of pads. 4. Worn disc. 5. Air in hydraulic sytem. 6. Not enough brake fluid in the reservoir.	Repair or replace. Replace. Clean disc and pads. Replace. Bleed air. Replenish.
Brake squeaking.	1. Carbon adhesion on pad surface. 2. Tilted pad. 3. Damaged wheel bearing. 4. Loose front-wheel axle or rear-wheel axle. 5. Worn pads or disc. 6. Foreign material in brake fluid. 7. Clogged return port of master cylinder.	Repair surface with sand-paper. Correct pad fitting or replace. Replace. Tighten to specified torque. Replace. Replace brake fluid. Disassemble and clean master cylinder.
Excessive brake lever stroke.	1. Air in hydraulic system. 2. Insufficient brake fluid. 3. Improper quality of brake fluid.	Bleed air. Replenish fluid to specified level; bleed air. Replace with correct fluid.
Leakage of brake fluid.	1. Insufficient tightening of connection joints. 2. Cracked hose. 3. Worn piston and/or cup.	Tighten to specified torque. Replace. Replace piston and/or cup.
Brake drags.	1. Rusty part. 2. Insufficient brake lever or brake pedal pivot lubrication. 3. Malfunction of brake lock.	Clean and lubricate. Lubricate. Adjust or replace.

ELECTRICAL

Complaint	Symptom and possible causes	Remedy
No sparking or poor sparking.	1. Defective ignition coil/plug cap or crankshaft position sensor. 2. Defective spark plug. 3. Defective generator. 4. Defective ECM. 5. Defective tip over sensor. 6. Open-circuited wiring connections.	Replace. Replace. Replace. Replace. Replace. Check and repair.
Spark plug soon become fouled with carbon.	1. Mixture too rich. 2. Idling speed set too high. 3. Incorrect gasoline. 4. Dirty air cleaner element. 5. Too cold spark plug.	Consult FI system. Adjust idle adjust screw or repalce the IAC valve. Change. Clean or replace. Replace with hot type plug.
Spark plug become fouled too soon.	1. Worn piston rings. 2. Worn piston or cylinder. 3. Excessive clearance of valve stems in valve guides. 4. Worn stem oil seals.	Replace. Replace. Replace. Replace.
Spark plug electrodes overheat or burn.	1. Too hot spark plug. 2. Overheated the engine. 3. Loose spark plug. 4. Too lean mixture.	Replace with cold type plug. Tune up. Retighten. Consult FI system.
Generator does not charge.	1. Open- or short-circuited lead wires, or loose lead connections. 2. Short-circuited, grounded or open generator coil. 3. Short-circuited or panctured regulator/rectifier.	Repair or replace or retighten. Replace. Replace.
Generator does charge, but charging rate is below the specification.	1. Lead wires tend to get short- or open-circuited or loosely connected at terminals. 2. Grounded or open-circuited startor coil or generator. 3. Defective regulator/rectifier. 4. Defective cell plates in the battery.	Repair or retighten. Replace. Replace. Replace the battery.
Generator overcharges.	1. Internal short-circuit in the battery. 2. Damaged or defective resistor element in the regu-lator/recitifier. 3. Poorly grounded regulator/rectifier.	Replace the battery. Replace. Clean and tighten ground connection.
Unstable charging.	1. Lead wire insulation frayed due to vibration, resulting in intermittent short-circuiting. 2. Internally short-circuited generator. 3. Defective regulator/rectifier.	Repair or replace. Replace. Replace.
Starter button is not effective.	1. Run down battery. 2. Defective switch contacts. 3. Brushes not seating properly on starter motor commutator. 4. Defective starter relay or starter interlock switch. 5. Defective main fuse.	Repair or replace. Replace. Repair or replace. Replace. Replace.

BATTERY

Complaint	Symptom and possible causes	Remedy
"Sulfation", acidic white powdery substance or spots on surfaces of cell plates.	1. Cracked battery case. 2. Battery has been left in a run-down condition for a long time.	Replace the battery. Replace the battery.
Battery runs down quickly.	1. Trouble in charging system. 2. Cell plates have lost much of their active material as a result of overcharging. 3. Internal short-circuit in the battery. 4. Too low battery voltage. 5. Too old battery.	Check the generator, regulator/rectifier and circuit connections and make necessary adjustments to obtain specified charging operation. Replace the battery, and correct the charging system. Replace the battery. Recharge the battery fully. Replace the battery.
Battery "sulfation".	1. Incorrect charging rate. (When not in use battery should be checked at least once a month to avoid sulfation.) 2. The battery was left unused for too long.	Replace the battery. Replace the battery if badly sulfated.

SPECIAL TOOLS

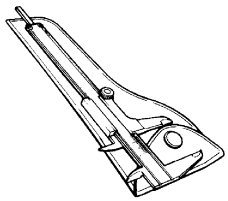 09900-20102 Vernier calipers	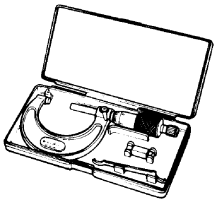 09900-20202 Micrometer (25 – 50 mm)	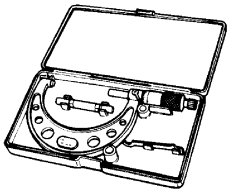 09900-20204 Micrometer (50 – 75 mm)	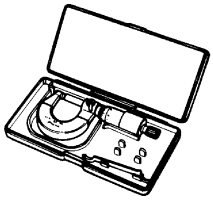 09900-20205 Micrometer (0 – 25 mm)	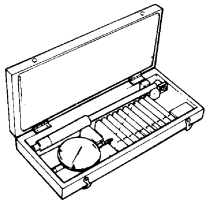 09900-20508 Cylinder gauge set
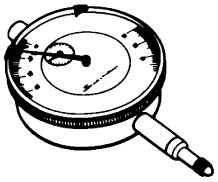 09900-20602 Dial gauge (1/1 000 mm, 1 mm)	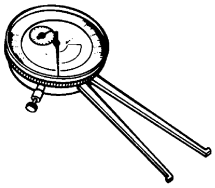 09900-20605 Dial calipers (1/100 mm, 10 – 34 mm)	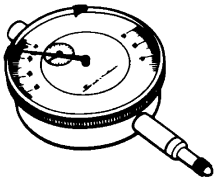 09900-20607 Dial gauge (1/100 mm, 10 mm)	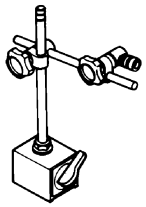 09900-20701 Magnetic stand	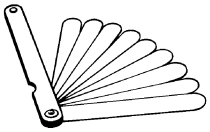 09900-20803/ 09900-20806 Thickness gauge
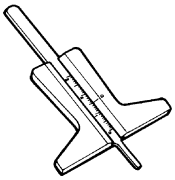 09900-20805 Tire depth gauge	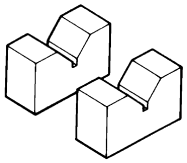 09900-21304 V-block (100 mm)	 09900-22301/ 09900-22302 Plastigauge	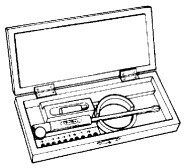 09900-22403 Small bore gauge (18 – 35 mm)	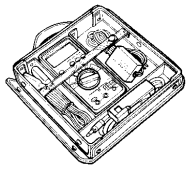 09900-25008 Multi circuit tester set
 09900-26006 Tachometer	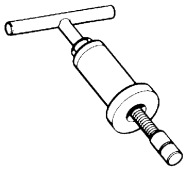 09910-32812 Crankshaft installer	 09910-32870 Attachment	 09910-60611 Universal clamp wrench	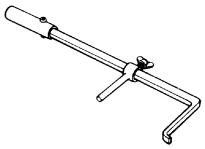 09913-50121 Oil seal remover
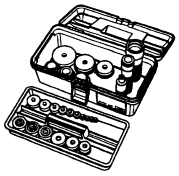 09913-70210 Bearing installer set	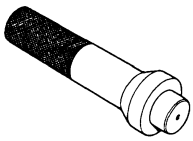 09913-75830 Bearing installer	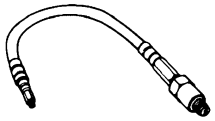 09915-63310 Compression gauge adaptor	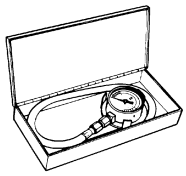 09915-64512 Compression gauge	 09915-74511 Oil pressure gauge

 09915-74521 Oil pressure gauge hose	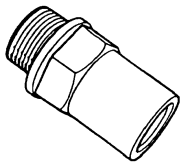 09915-74540 Oil pressure gauge hose attachment	 09915-77331 Pressure gauge	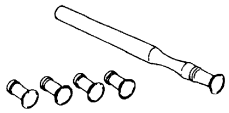 09916-10911 Valve lapper set	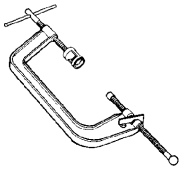 09916-14510 Valve lifter
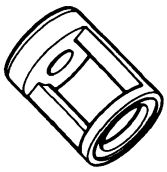 09916-14910 Valve lifter attachment	 09916-20610 Valve seat cutter (N–125)	 09916-20620 Valve seat cutter (N–122)	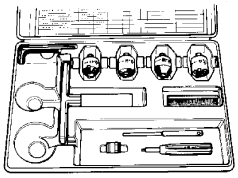 09916-21111 Valve seat cutter set	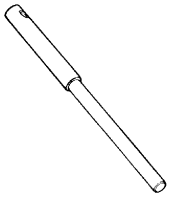 09916-24311 Solid pilot (N–100 – 5.0)
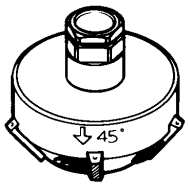 09916-24935 Valve seat cutter (N–608)	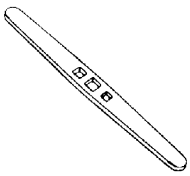 09916-34542 Valve guide reamer handle	 09916-34550 Valve guide reamer (5.5 mm)	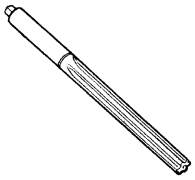 09916-34580 Valve guide reamer (10.8 mm)	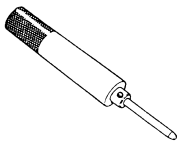 09916-57330 Valve guide installer
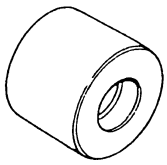 09916-57340 Valve guide installer attachment	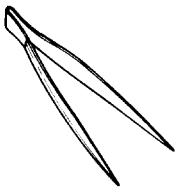 09916-84511 Tweezers	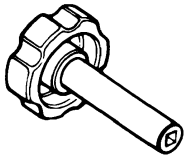 09917-14920 Valve clearance adjusting driver	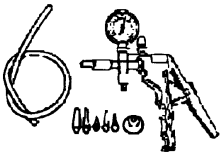 09917-47011 Vacuum pump gauge	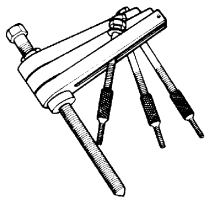 09920-13120 Crankcase/ crankshaft separator
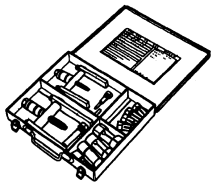 09921-20240 Bearing remover set	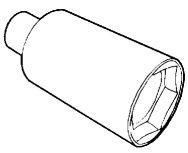 09922-21410 Long socket (46 mm)	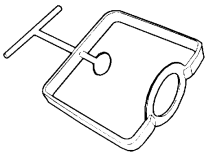 09922-31420 Clutch spring compressor	 09923-73210 Bearing remover	 09923-74511 Bearing remover

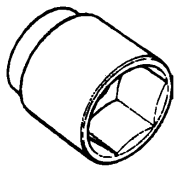 09924-52410 Socket	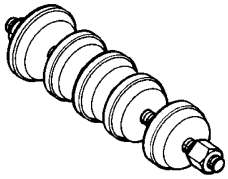 09924-84510 Bearing instaler set	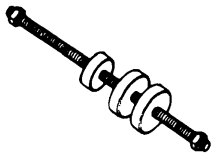 09924-84521 Bearing installer set	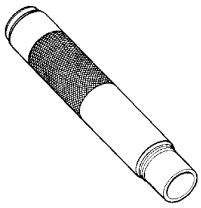 09925-18011 Bearing installer	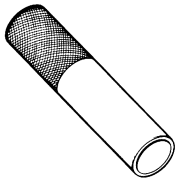 09925-98221 Bearing installer
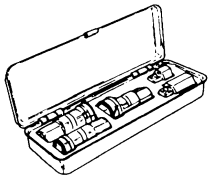 09930-10121 Spark plug socket wrench set	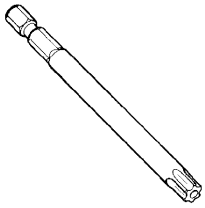 09930-11930 Torx bit JT30H	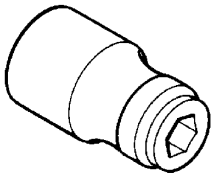 09930-11940 Bit holder	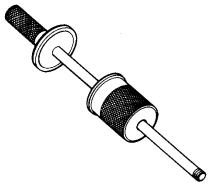 09930-30104 Sliding shaft	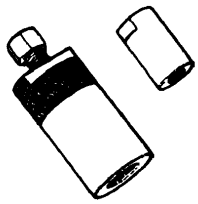 09930-31921 Rotor remover
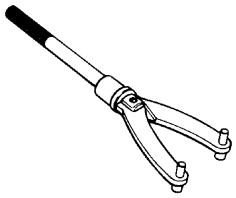 09930-40113 Rotor holder	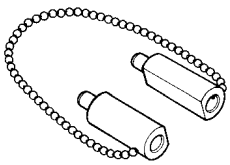 09930-40130 Attachment	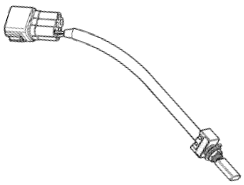 09930-82720 Mode select switch	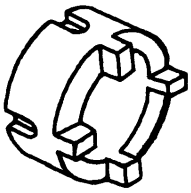 09940-11420 Steering stem nut socket	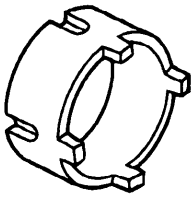 09940-11430 Steering stem nut socket
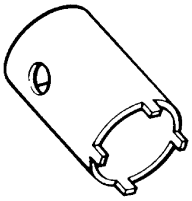 09940-14911 Steering socket wrench	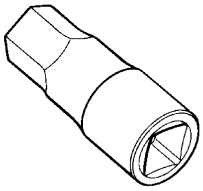 09940-30230 Hexagon socket (17 mm)	 09940-34520 “T” Handle	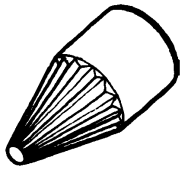 09940-34531 Attachment A	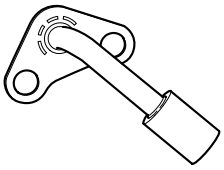 09940-40230 Fuel pressure gauge hose attachment
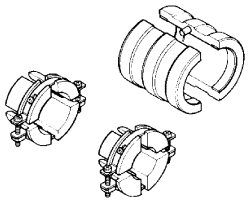 09940-52861 Front fork oil seal installer set	 09940-92440 Wrench set	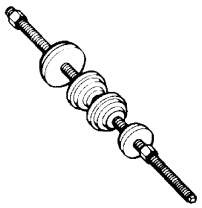 09941-34513 Steering race installer	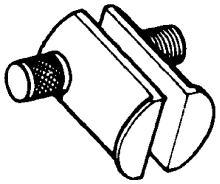 09941-54911 Bearing outer race remover	 09941-74910 Bearing outer race remover

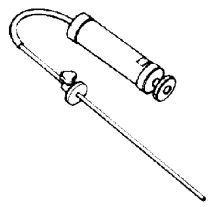	
09943-74111 **Front fork oil level gauge**	**09951-16080** **Bearing installer**

NOTE:
When ordering a special tool, please confirm whether it is available or not.

WIRING HARNESS, CABLE AND HOSE ROUTING
WIRING HARNESS ROUTING

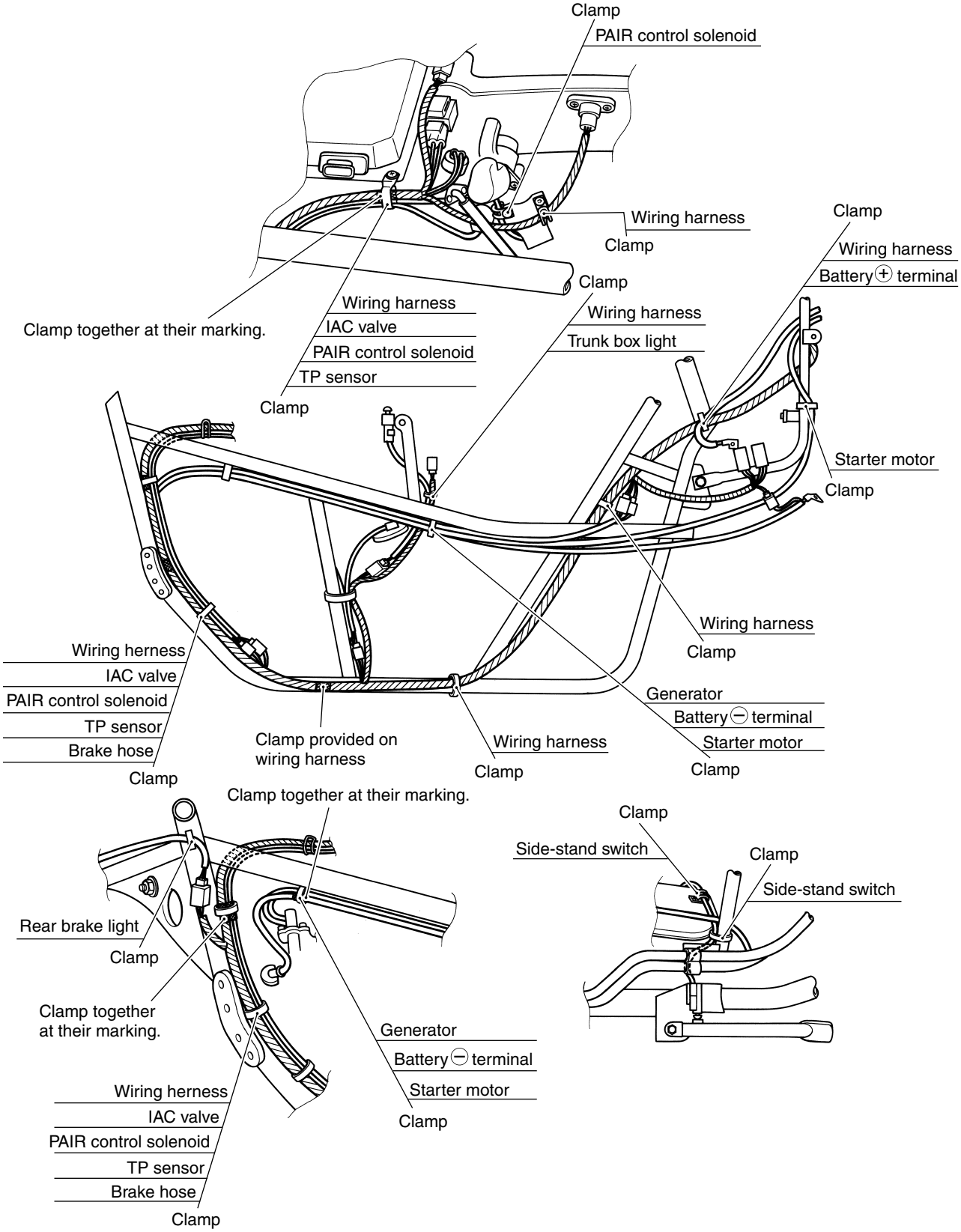

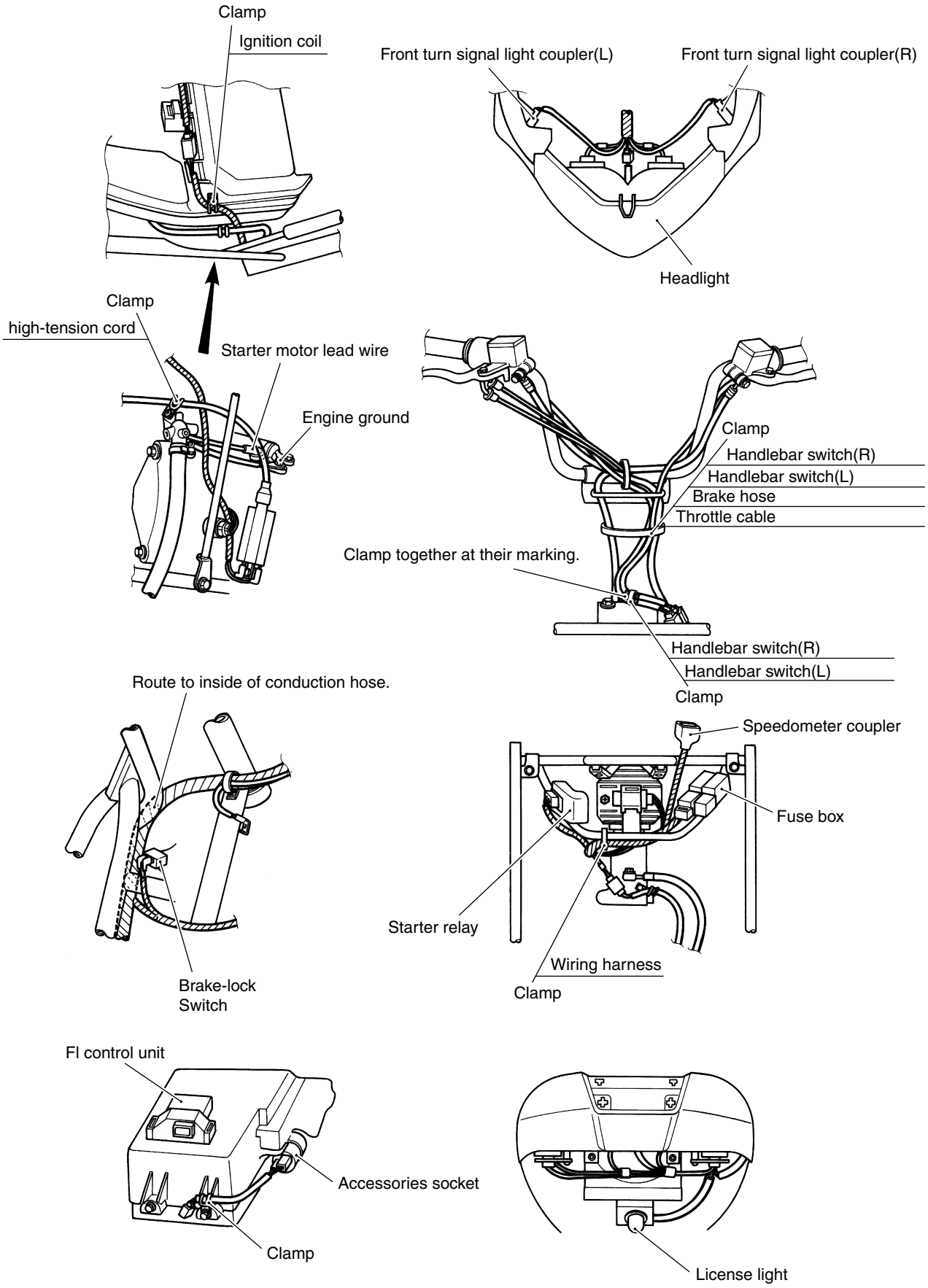
Clamp
Ignition coil
Front turn signal light coupler(L)
Front turn signal light coupler(R)
Headlight
Clamp
high-tension cord
Starter motor lead wire
Engine ground
Clamp
Handlebar switch(R)
Handlebar switch(L)
Brake hose
Throttle cable
Clamp together at their marking.
Handlebar switch(R)
Handlebar switch(L)
Clamp
Route to inside of conduction hose.
Brake-lock
Switch
Speedometer coupler
Fuse box
Starter relay
Wiring harness
Clamp
FI control unit
Accessories socket
Clamp
License light

CABLE ROUTING

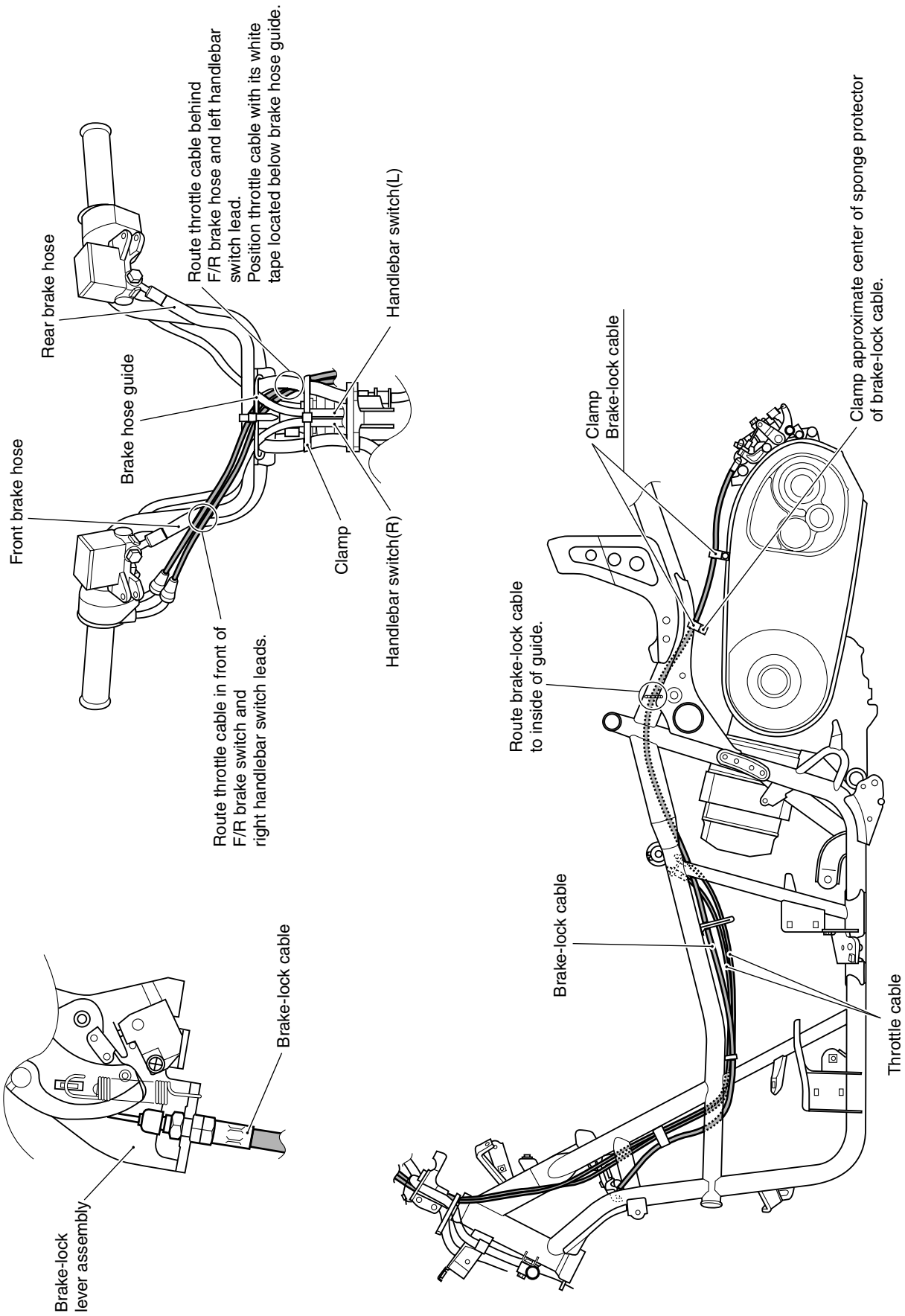

SPEEDOMETER CABLE ROUTING

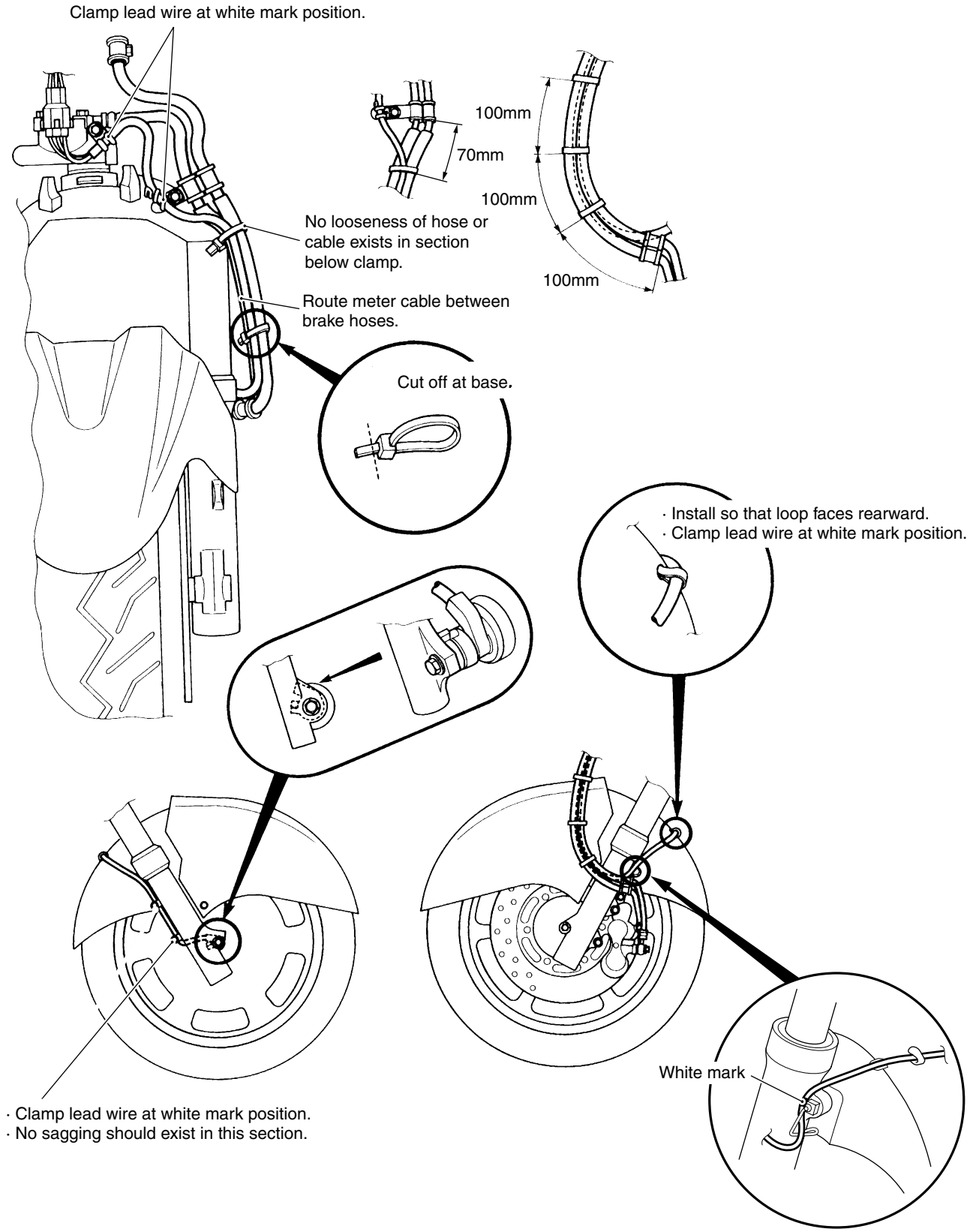

SEAT LOCK CABLE ROUTING

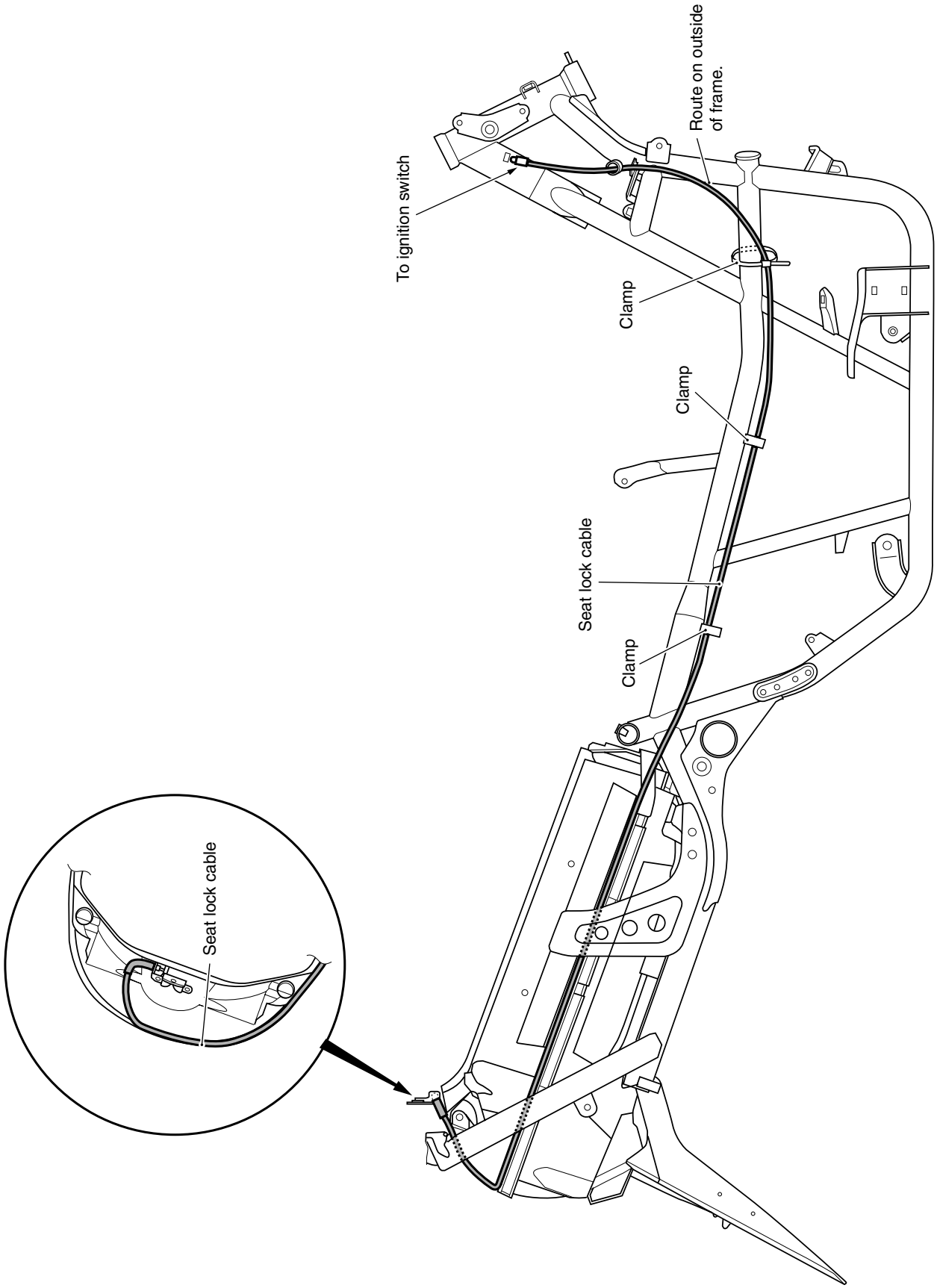

REAR SHOCK ABSORBER HOSE ROUTING

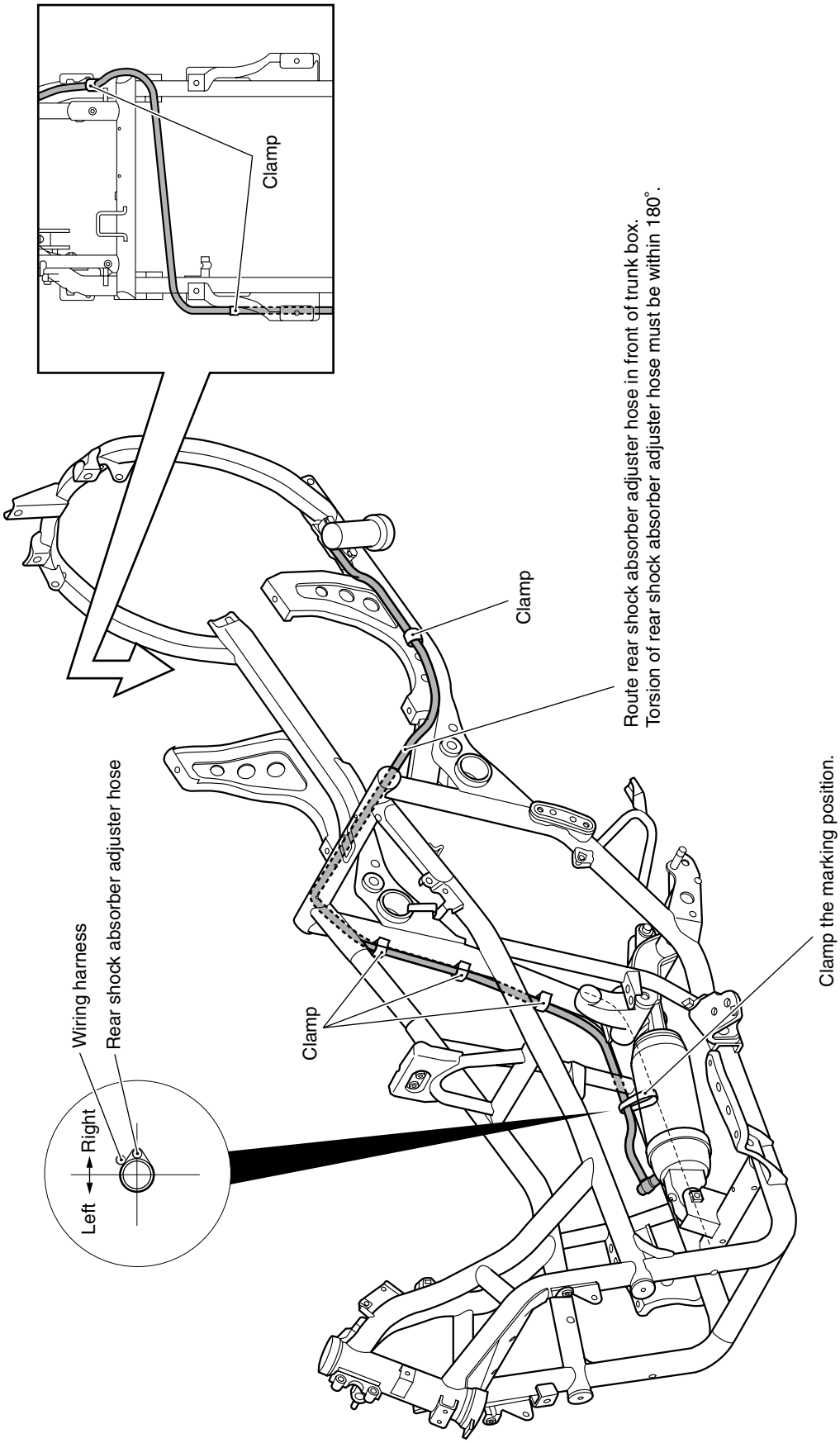

FRONT BRAKE HOSE ROUTING

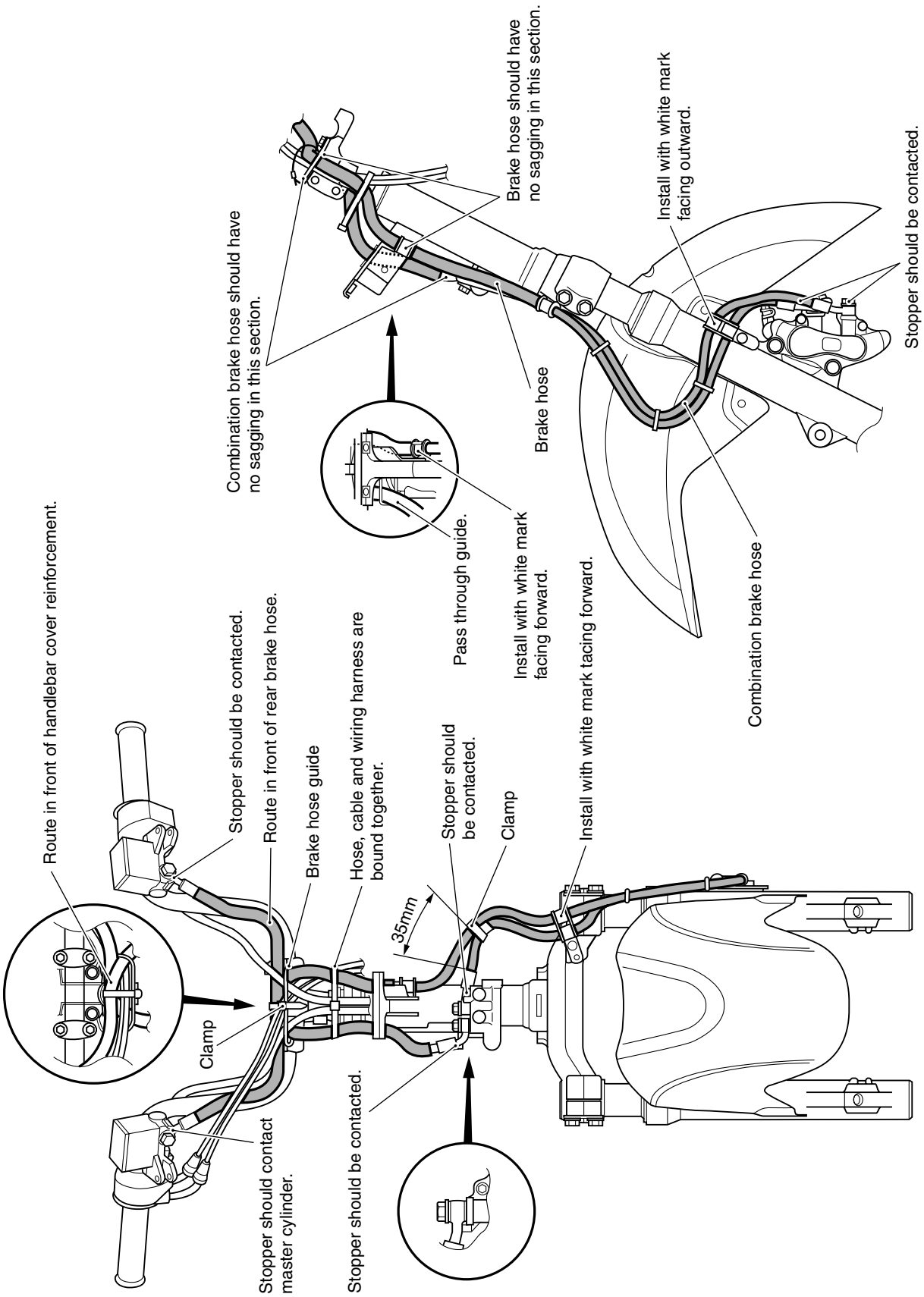

REAR BRAKE ROUTING

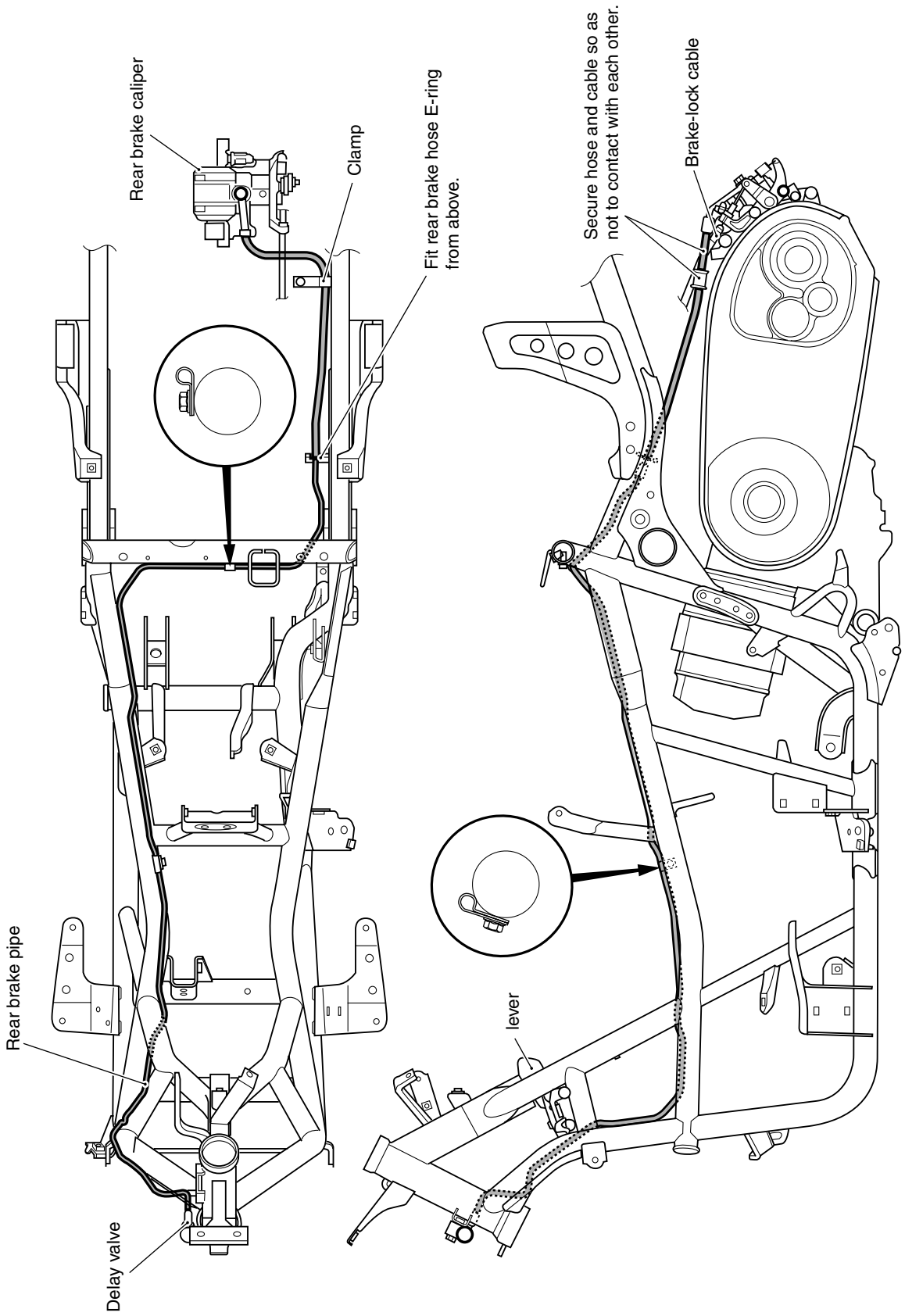

RADIATOR HOSE ROUTING

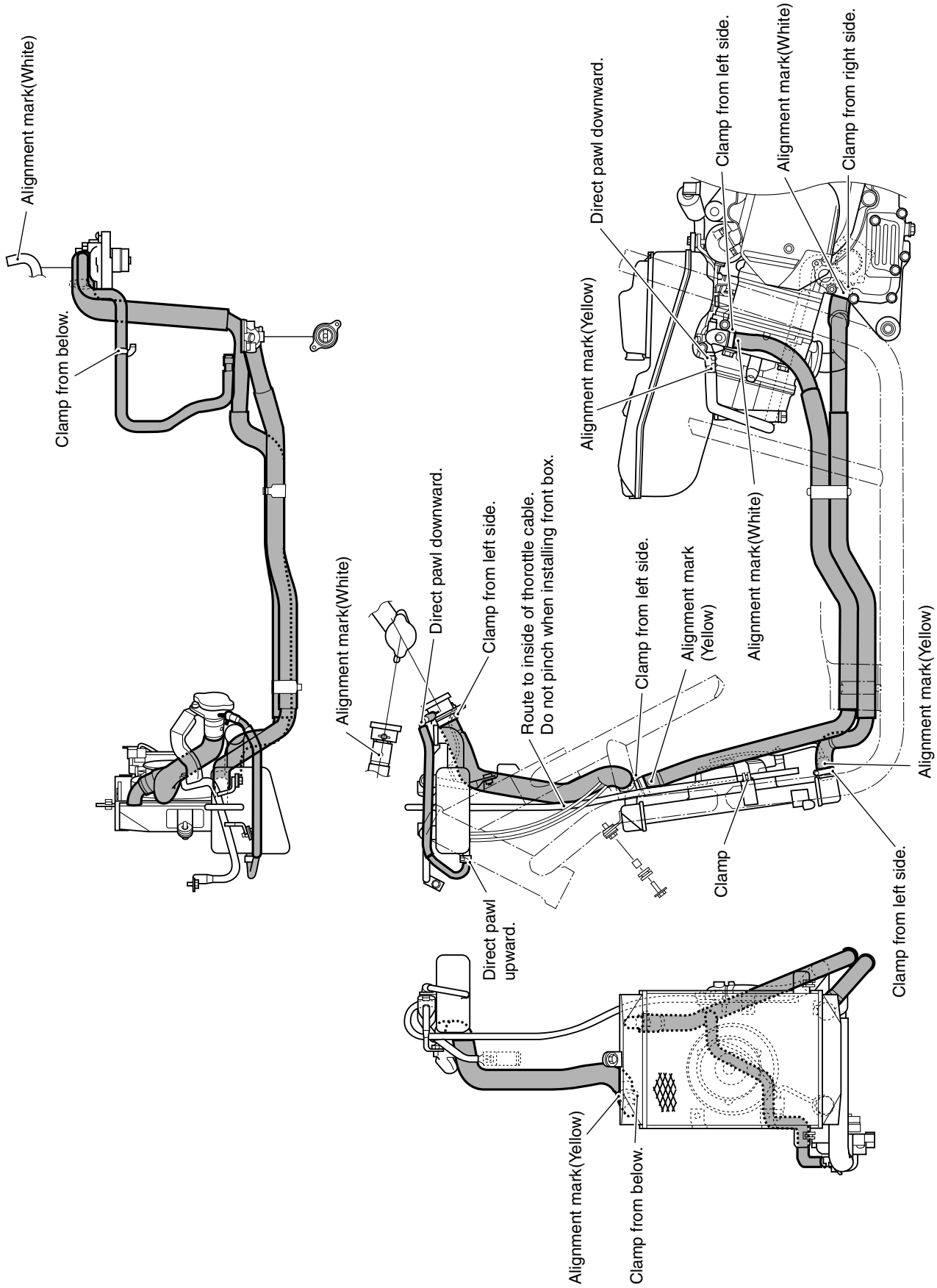

FUEL TANK, FUEL TANK LOWER COVER MOUNTING

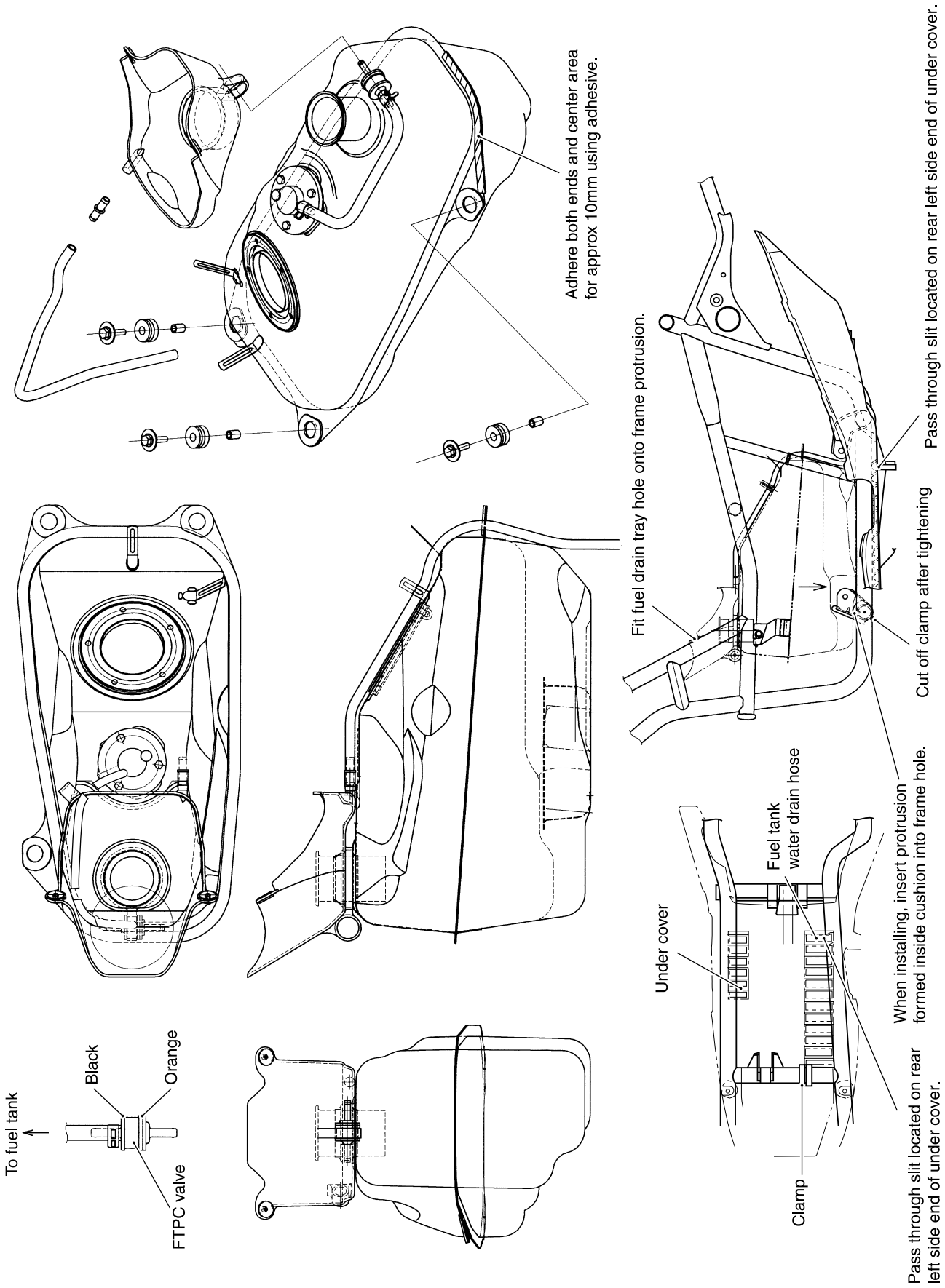

THROTTLE BODY INSTALLATION/HOSE ROUTING

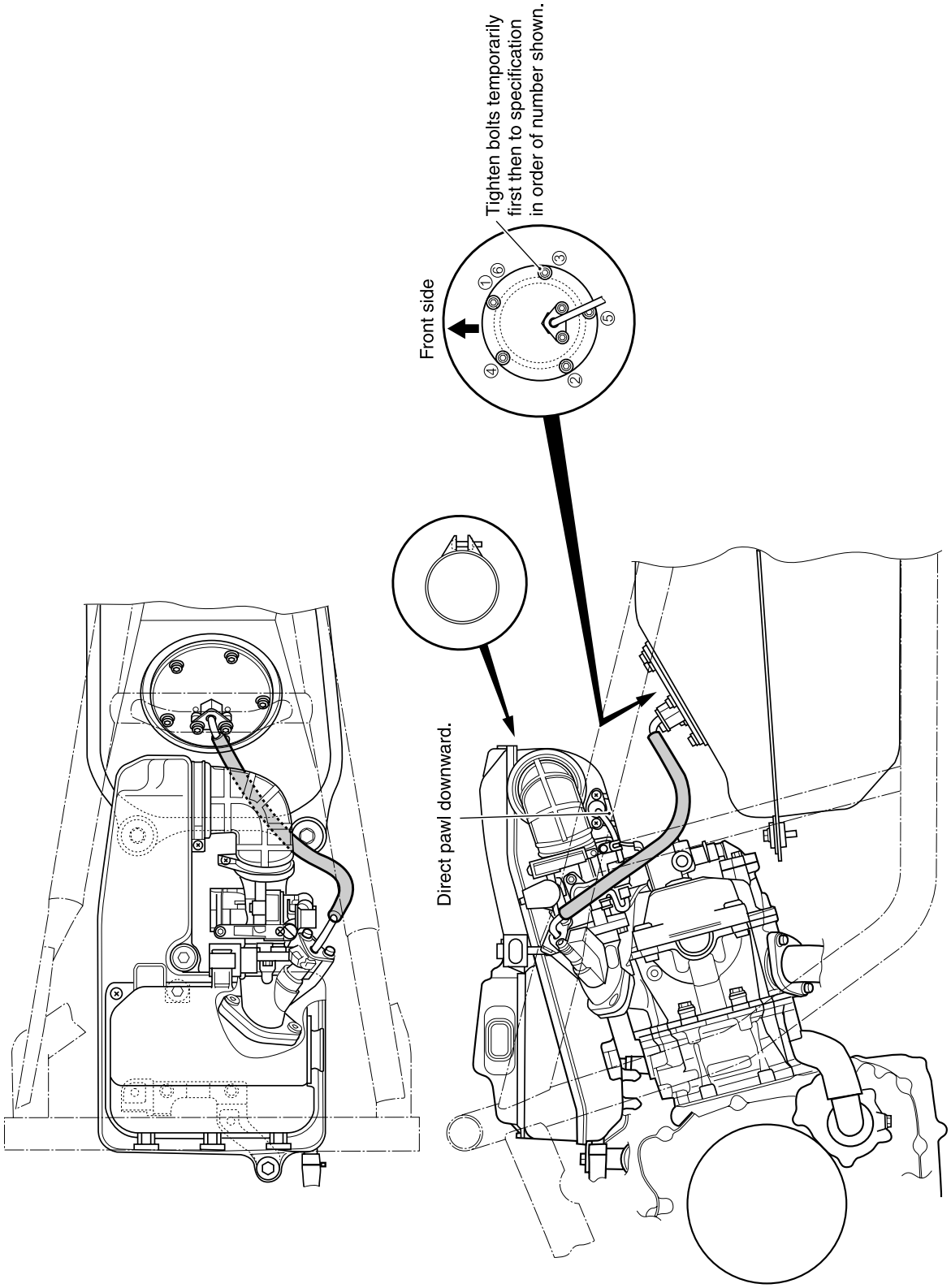

SIDE-STAND SET-UP

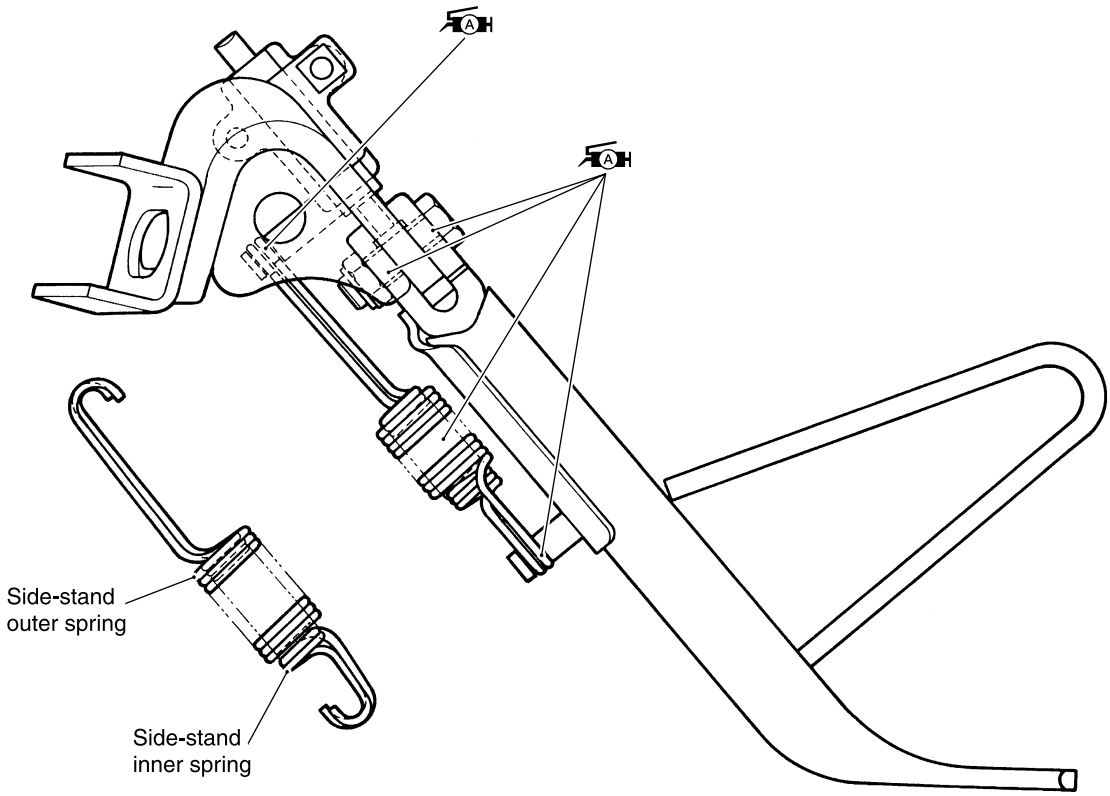

CENTER STAND SET-UP

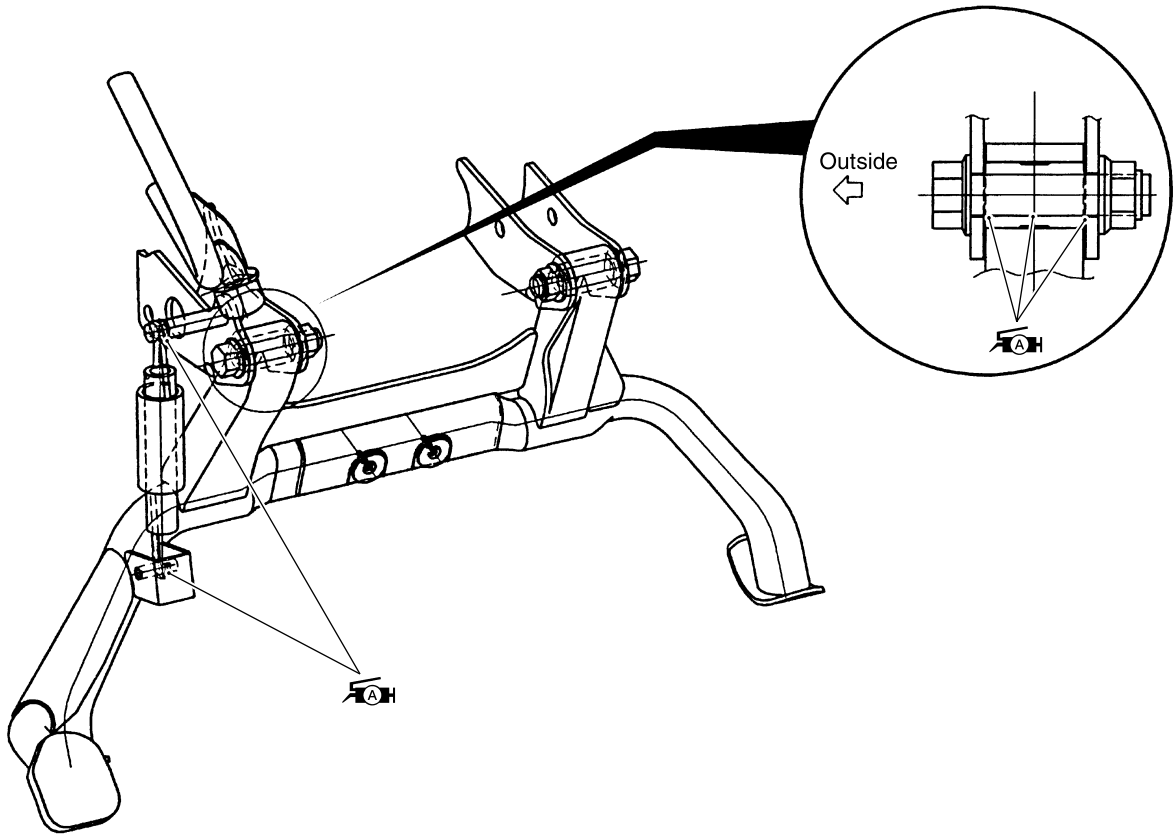

TIGHTENING TORQUE
ENGINE

ITEM			N·m	kgf-m	lb-ft
Rear axle nut			120	12.0	87.0
Cam chain tensioner bolt			13	1.3	9.5
Camshaft holder bolt			10	1.0	7.0
Oil drain plug			23	2.3	16.5
Oil drain plug			12	1.2	8.5
Oil level bolt			12	1.2	8.5
Oil filler bolt			12	1.2	8.5
Starter clutch bolt			25	2.5	18.0
Generator coil bolt			10	1.0	7.0
CKP censor bolt			5	0.5	3.7
Lead wire guide bolt			10	1.0	7.0
Crankcace bolt	8 mm	Tighten lightly	13	1.3	9.5
		Tighten firmly	22	2.2	16.0
	6 mm	Tighten firmly	11	1.1	8.0
Balancer drive gear nut			150	15.0	108.5
Balancer driven gear nut			50	5.0	36.0
Oil pump bolt			10	1.0	7.0
Generator rotor nut			160	16.0	115.5
Transmission cover bolt			22	2.2	16.0
Clutch housing nut			85	8.5	61.5
Clutch shoe nut			105	10.5	76.0
Fixed drive face nut			105	10.5	76.0
Clutch inner cover bolt			11	1.1	8.0
Generator cover bolt			11	1.1	8.0
Water pump bolt			10	1.0	7.0
Oil filter cap bolt			10	1.0	7.0
Cylinder head bolt		Tighten lightly	25	2.5	18.0
		Tighten firmly	41	4.1	29.5
Cylinder head nut (M8)			25	2.5	18.0
Cylinder head nut (M6)			10	1.0	7.0
Cylinder nut			10	1.0	7.0
Cam sprocket bolt			15	1.5	11.0
Camshaft holder bolt			10	1.0	7.0
Camshaft journal holder bolt			10	1.0	7.0
Cam chain tension adjuster bolt			10	1.0	7.0
Spring holder bolt			8	0.8	5.7
Cylinder head cover bolt			14	1.4	10.0
Spark plug			11	1.1	8.0
Lock nut			10	1.0	7.0
Main gallery plug			23	2.3	16.5
Exhaust pipe bolt			23	2.3	16.5
Exhaust pipe joint nut			30	3.0	21.5
Muffler mounting nut			23	2.3	16.5

ITEM	N·m	kgf-m	lb-ft
Air bleeder bolt	6	0.6	4.3
Cooling fan mounting bolt	10	1.0	7.0
Radiator mounting bolt	10	1.0	7.0
Cooling fan thermo-switch	18	1.8	13.0
Water temperature sensor	12	1.2	8.5
Thermostat case bolt	10	1.0	7.0
Water pump case bolt	10	1.0	7.0
Starter moter housing bolt	3.7	0.37	2.7
Starter moter mounting bolt	7	0.7	5.0

FI SYSTEM AND INTAKE AIR SYSTEM

ITEM	N·m	kgf-m	lb-ft
Fuel cut valve bolt	3.5	0.35	2.5
Fuel pump mounting bolt	4.5	0.45	3.3
Fuel tank bolt	10	1.0	7.0
TPS screw	3.5	0.35	2.5
IAT sensor	3	0.3	2.0

CHASSIS

ITEM	N·m	kgf-m	lb-ft
Pillion rider handle bolt	23	2.3	16.5
Front axle	65	6.5	47.0
Pinch bolt	23	2.3	16.5
Pad pin	18	1.8	13.0
Caliper mounting bolt	25	2.5	18.0
Caliper housing bolt	23	2.3	16.5
Bleeder valve	7.5	0.75	5.5
Brake disc bolt	23	2.3	16.5
Union bolt	23	2.3	16.5
Master cylinder bolt	10	1.0	7.0
Handlebar clamp bolt	23	2.3	16.5
Cylinder bolt	30	3.0	21.5
Front fork clamp bolt	23	2.3	16.5
Front fork cap bolt	45	4.5	32.5
Steering stem nut	30	3.0	21.5
Lock nut	30	3.0	21.5
Handlebar holder set bolt	23	2.3	16.5
Handlebar holder clamp bolt	55	5.5	40.0
Rear wheel nut	50	5.0	36.0
Caliper mounting bolt	25	2.5	18.0
Pad pin	18	1.8	13.0
Brake-lock housing bolt	23	2.3	16.5
Union bolt	23	2.3	16.5
Master cylinder bolt	10	1.0	7.0
Delay valve mounting bolt	10	1.0	7.0
Brake pipe joint bolt	16	1.6	11.5
Crank case bracket nut	85	8.5	61.5
Rubber damper bolt	85	8.5	61.5
Engine mounting nut	93	9.3	67.5
Rear shock absorber bolt	50	5.0	36.0
Cushion lever mounting nut	78	7.8	56.5
Rear cushion rod nut	50	5.0	36.0
Rear shock absorber adjuster bolt	10	1.0	7.0
Muffler bracket bolt	50	5.0	36.0

TIGHTENING TORQUE CHART

For other nuts and bolts not listed in the preceding page, refer to this chart:

Bolt Diameter Ⓐ (mm)	Conventional or "4" marked bolt			"7" marked bolt		
	N·m	kgf-m	lb-ft	N·m	kgf-m	lb-ft
4	1.5	0.15	1.0	2.3	0.23	1.5
5	3	0.3	2.0	4.5	0.45	3.0
6	5.5	0.55	4.0	10	1.0	7.0
8	13	1.3	9.5	23	2.3	16.5
10	29	2.9	21.0	50	5.0	36.0
12	45	4.5	32.5	85	8.5	61.5
14	65	6.5	47.0	135	13.5	97.5
16	105	10.5	76.0	210	21.0	152.0
18	160	16.0	115.5	240	24.0	173.5

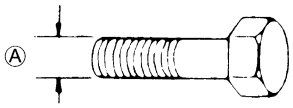

Conventional bolt

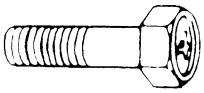

"4" marked bolt

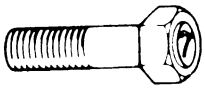

"7" marked bolt

WIRING DIAGRAM
E-02,19,54

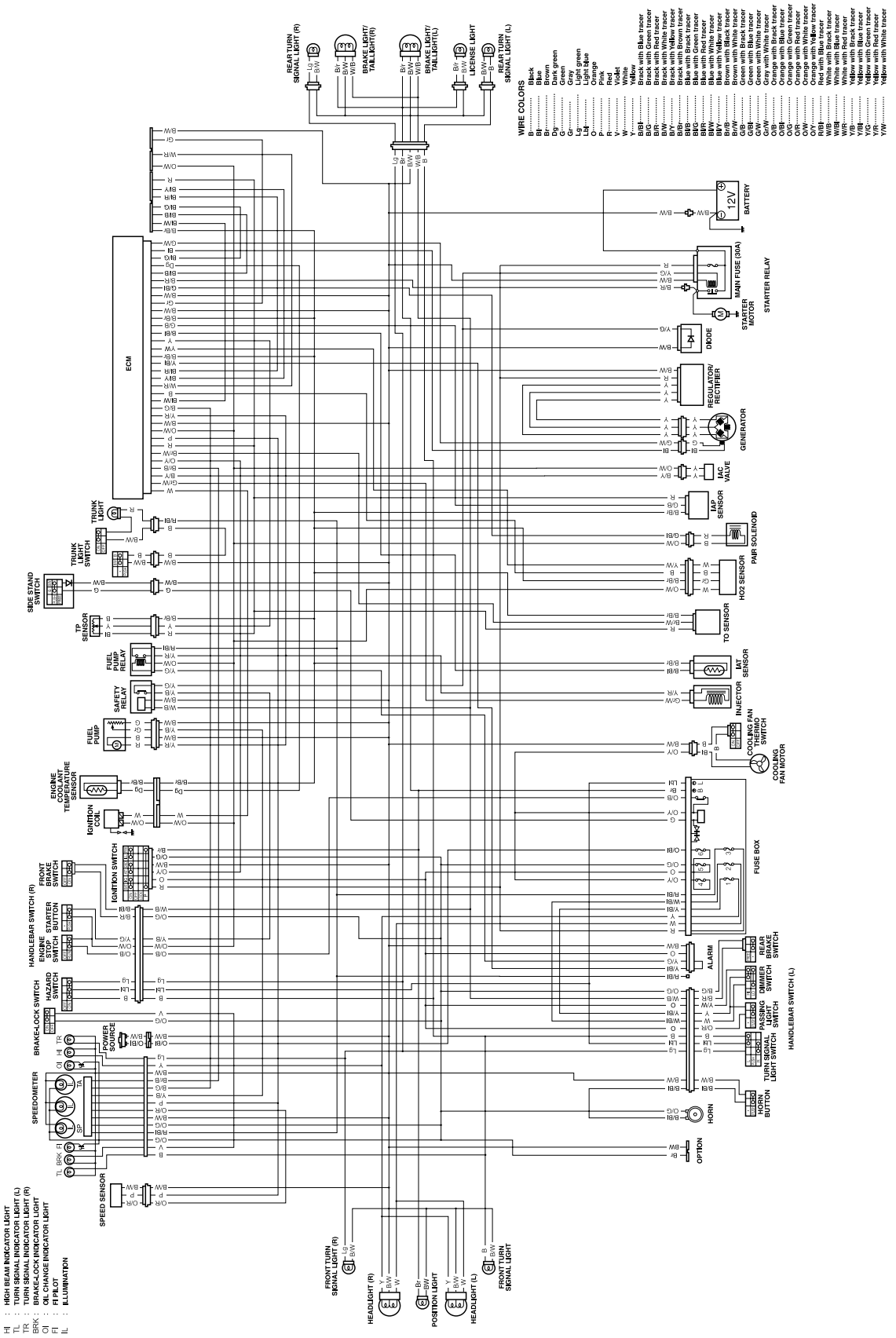

E-03,28,33

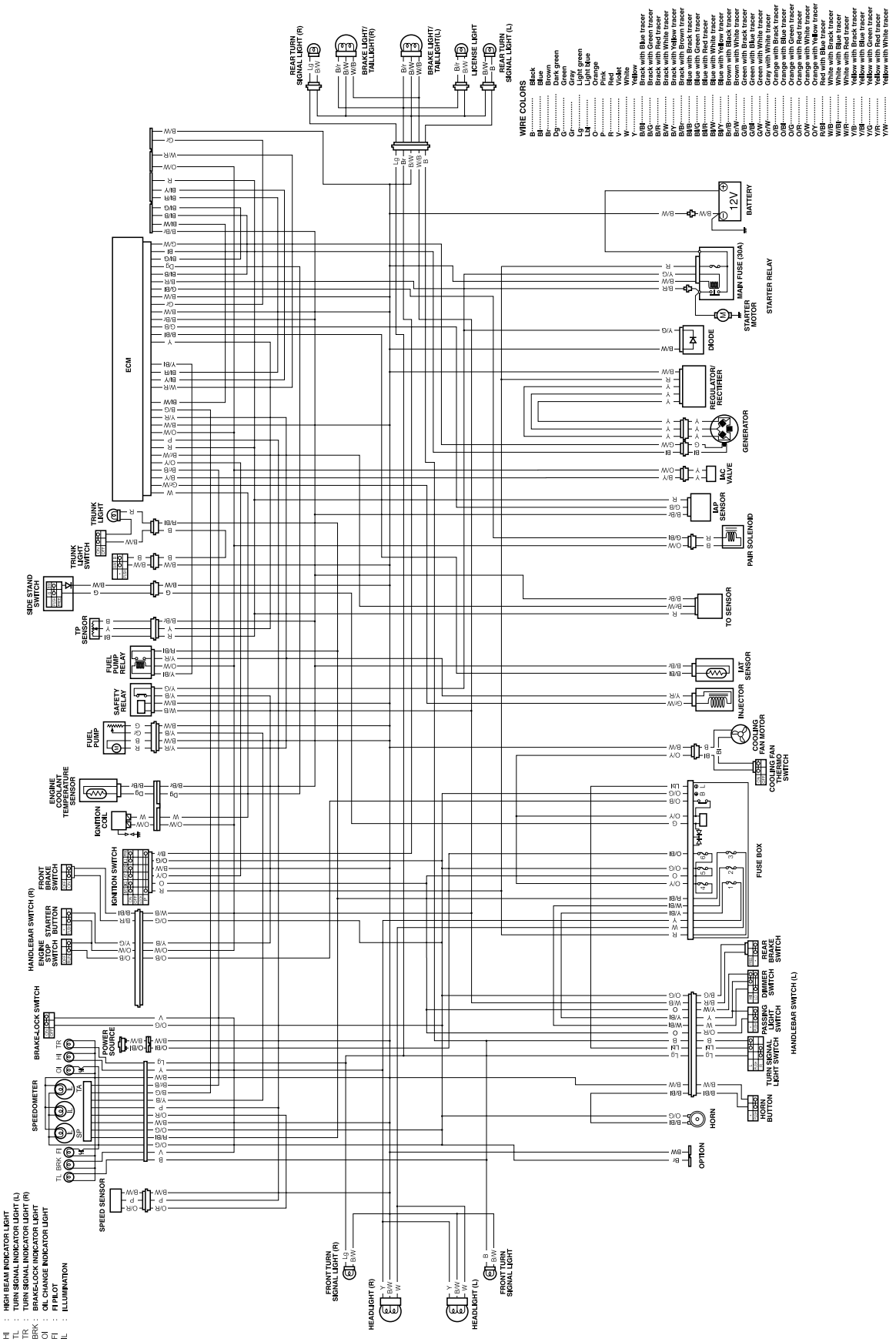
HI : HIGH BEAM INDICATOR LIGHT
TL : TURN SIGNAL INDICATOR LIGHT (L)
TR : TURN SIGNAL INDICATOR LIGHT (R)
BRK : BRAKE-LOCK INDICATOR LIGHT
OI : OIL CHANGE INDICATOR LIGHT
FI : FI PILOT
IL : ILLUMINATION
WIRE COLORS
B : Black
Bl : Blue
Br : Brown
Dg : Dark green
Gy : Green
Gr : Gray
Lg : Light green
Lb : Light blue
O : Orange
P : Pink
R : Red
V : Violet
W : White
Y : Yellow
B/Bl : Black with Blue tracer
B/G : Black with Green tracer
B/R : Black with Red tracer
B/W : Black with White tracer
B/Y : Black with Yellow tracer
B/Br : Black with Brown tracer
Bl/B : Blue with Black tracer
Bl/G : Blue with Green tracer
Bl/R : Blue with Red tracer
Bl/W : Blue with White tracer
Bl/Y : Blue with Yellow tracer
Br/Y : Brown with Yellow tracer
Br/W : Brown with White tracer
G/B : Green with Black tracer
G/Bl : Green with Blue tracer
G/W : Green with White tracer
Gr/W : Gray with White tracer
O/B : Orange with Black tracer
O/Bl : Orange with Blue tracer
O/G : Orange with Green tracer
O/R : Orange with Red tracer
O/W : Orange with White tracer
O/Y : Orange with Yellow tracer
R/Bl : Red with Blue tracer
W/B : White with Black tracer
W/Bl : White with Blue tracer
W/R : White with Red tracer
Y/B : Yellow with Black tracer
Y/Bl : Yellow with Blue tracer
Y/G : Yellow with Green tracer
Y/R : Yellow with Red tracer
Y/W : Yellow with White tracer
REAR TURN SIGNAL LIGHT (R)
BRAKE LIGHT/ TAILLIGHT(R)
BRAKE LIGHT/ TAILLIGHT(L)
LICENSE LIGHT
REAR TURN SIGNAL LIGHT (L)
ECM
BATTERY
12V
MAIN FUSE (30A)
STARTER RELAY
STARTER MOTOR
DIODE
REGULATOR/ RECTIFIER
GENERATOR
IAC VALVE
IAP SENSOR
PAIR SOLENOID
TO SENSOR
IAT SENSOR
INJECTOR
COOLING FAN MOTOR
COOLING FAN THERMO SWITCH
FUSE BOX
REAR BRAKE SWITCH
DIMMER SWITCH
PASSING LIGHT SWITCH
TURN SIGNAL LIGHT SWITCH
HANDLEBAR SWITCH (L)
HORN
OPTION
TRUNK LIGHT
TRUNK LIGHT SWITCH
SIDE STAND SWITCH
TP SENSOR
FUEL PUMP RELAY
SAFETY RELAY
FUEL PUMP
ENGINE COOLANT TEMPERATURE SENSOR
IGNITION COIL
IGNITION SWITCH
FRONT BRAKE SWITCH
HANDLEBAR SWITCH (R)
ENGINE STOP SWITCH
STARTER BUTTON
BRAKE-LOCK SWITCH
POWER SOURCE
SPEEDOMETER
SPEED SENSOR
FRONT TURN SIGNAL LIGHT (R)
HEADLIGHT (R)
HEADLIGHT (L)
FRONT TURN SIGNAL LIGHT

SERVICE DATA

VALVE + VALVE GUIDE

Unit:mm (in)

ITEM	STANDARD		LIMIT
Valve diam.	IN.	30.6 (1.20)	—
	EX.	27.0 (1.06)	—
Tappet clearance (when cold)	IN.	0.08 – 0.13 (0.003 – 0.005)	—
	EX.	0.17 – 0.22 (0.007 – 0.009)	—
Valve guide to valve stem clearance	IN.	0.10 – 0.37 (0.004 – 0.015)	—
	EX.	0.30 – 0.57 (0.012 – 0.022)	—
Valve guide I.D.	IN. & EX.	5.000 – 5.012 (0.1969 – 0.1973)	—
Valve stem O.D.	IN.	4.975 – 4.990 (0.1959 – 0.1965)	—
	EX.	4.955 – 4.970 (0.1951 – 0.1957)	—
Valve stem deflection	IN. & EX.	—	0.35 (0.014)
Valve stem runout	IN. & EX.	—	0.05 (0.002)
Valve head thickness	IN. & EX.	—	0.5 (0.02)
Valve stem end length	IN. & EX.	—	1.7 (0.07)
Valve seat width	IN. & EX.	0.9 – 1.1 (0.035 – 0.043)	—
Valve head radial runout	IN. & EX.	—	0.03 (0.001)
Valve spring free length	IN. & EX.	—	38.8 (1.53)
Valve spring tension	IN. & EX.	182 – 210N (18.2 – 21.0 kgf) (40.1 – 46.3 lbs) (at length 31.5 mm) (1.24 in)	—

CAMSHAFT + CYLINDER HEAD

Unit:mm (in)

ITEM	STANDARD		LIMIT
Cam height	IN.	33.430 – 33.477 (1.316 – 1.318)	33.130 (1.304)
	EX.	33.300 – 33.347 (1.311 – 1.313)	33.000 (1.299)
Camshaft journal oil clearance	ϕ22	0.032 – 0.066 (0.001 – 0.003)	0.15 (0.006)
	ϕ17.5	0.028 – 0.059 (0.001 – 0.002)	0.15 (0.006)
Camshaft journal holder I.D.	ϕ22	22.012 – 22.025 (0.8666 – 0.8671)	—
	ϕ17.5	17.512 – 17.525 (0.689 – 0.690)	—
Camshaft journal O.D.	ϕ22	21.959 – 21.980 (0.8645 – 0.8654)	—
	ϕ17.5	17.466 – 17.484 (0.6876 – 0.6883)	—
Camshaft runout	—		0.10 (0.004)
Rocker arm shaft I.D.	IN. & EX.	12.000 – 12.018 (0.472 – 0.473)	—
Rocker arm shaft O.D.	IN. & EX.	11.973 – 11.984 (0.471 – 0.472)	—
Cylinder head distortion	—		0.05 (0.002)

CYLINDER + PISTON + PISTON RING

Unit:mm(in)

ITEM	STANDARD			LIMIT
Compression pressure	860 – 900 kPa (8.6 – 9.0 kgf/cm², 122 – 128 psi)			616 kPa (6.16 kgf/cm², 88 psi)
Piston to cylinder clearance	0.045 – 0.055 (0.0018 – 0.0022)			0.120 (0.005)
Cylinder bore	83.000 – 83.015 (3.2677 – 3.2683)			83.085 (3.271)
Piston diam.	82.950 – 82.965 (3.2657 – 3.2663) (Measure at 15 mm 0.6 in from the skirtend.)			82.880 (3.263)
Cylinder distortion	—			0.05 (0.002)
Piston ring free end gap	1st	R	Approx 11.3 (0.44)	9.0 (0.35)
	2nd	R	Approx 7.7 (0.30)	6.2 (0.24)
Piston ring end gap	1st		0.20 – 0.35 (0.008 – 0.014)	0.70 (0.03)
	2nd		0.35 – 0.50 (0.014 – 0.020)	1.0 (0.04)
Piston ring to groove clearance	1st		—	0.18 (0.007)
	2nd		—	0.15 (0.006)
Piston ring groove width	1st		1.01 – 1.03 (0.0398 – 0.0406)	—
	2nd		1.01 – 1.03 (0.0398 – 0.0406)	—
	Oil		2.01 – 2.03 (0.0791 – 0.0799)	—
Piston ring thickness	1st		0.97 – 0.99 (0.0382 – 0.0390)	—
	2nd		0.97 – 0.99 (0.0382 – 0.0390)	—
Piston pin bore	20.002 – 20.008 (0.7874 – 0.7877)			20.030 (0.789)
Piston pin O.D.	19.992 – 20.000 (0.7871 – 0.7874)			19.980 (0.787)

CONROD + CRANKSHAFT

Unit:mm (in)

ITEM	STANDARD	LIMIT
Conrod small end I.D.	20.006 – 20.014 (0.7876 – 0.7880)	20.040 (0.789)
Conrod deflection	—	3.0 (0.12)
Conrod big end side clearance	0.10 – 0.75 (0.004 – 0.030)	1.0 (0.04)
Conrod big end width	21.95 – 22.00 (0.864 – 0.866)	—
Width between crankshaft webs	59.9 – 60.1 (2.358 – 2.366)	—
Crankshaft runout	—	0.08 (0.003)

OIL PUMP

ITEM	STANDARD	LIMIT
Oil pressure (at 60 °C,140 °F)	Above 80 kPa (0.8 kgf/cm², 11 psi) Below160 kPa (1.6 kgf/cm², 23 psi) at 3 000 r/min.	—

CLUTCH

Unit:mm (in)

ITEM	STANDARD	LIMIT
Clutch wheel I.D.	150.0 – 150.2 (5.906 – 5.913)	150.5 (5.925)
Clutch shoe thickness	3.0 (0.12)	2.0 (0.08)
Engagement r/min	2 300 – 2 900 rpm	—
Lock-up r/min	3 500 – 4 500 rpm	—

TRANSMISSION

Unit:mm (in) (Except ratio)

ITEM	STANDARD	LIMIT
Primary reduction ratio	1.000	—
Reduction ratio	2.203 – 0.854	—
Secondary reduction	2.214	—
Final reduction ratio	2.785	—
Drive V-belt width	21.85 (0.86)	20.85 (0.82)
Movable driven face spring free length	125 (4.92)	118.7 (4.67)
Movable drive face roller O.D.	23.72 – 23.88 (0.93 – 0.94)	—
Drive / Driven face wear	—	0.4 (0.02)

INJECTOR + FUEL PUMP + FUEL PRESSURE REGULATOR

ITEM	SPECIFICATION	NOTE
Injector resistance	10 – 18 Ω at 20 °C (68 °F)	—
Fuel pump discharge amount	35 ml and more For 10 sec, at 300 kPa (3.0 kgf/cm², 43 psi)	—
Fuel pressure regulator operating set pressure	Approx.300 kPa (3.0 kgf/cm², 43 psi)	—

FI SENSORS

ITEM	SPECIFICATION		NOTE
CKP sensor resistance	180 – 280 Ω		
CKP sensor peak voltage	4.5 V and more (When cranking)		⊕ :G,⊖ :Bl
IAP sensor input voltage	4.5 – 5.5 V		
IAP sensor output voltage	Approx.2.6 V at idle speed		
TP sensor input voltage	4.5 – 5.5 V		
TP sensor resistance	Closed	Approx.0.6 kΩ	
	Opened	Approx.3.8 kΩ	
TP sensor output voltage	Closed	Approx.0.6 V	
	Opened	Approx.3.8 V	
ECT sensor input voltage	4.5 – 5.5 V		
ECT sensor resistance	Approx.1.14 kΩ at 40 °C (104 °F)		
IAT sensor input voltage	4.5 – 5.5 V		
IAT sensor resistance	Approx.1.14 kΩ at 40 °C (104 °F)		
TO sensor resistance	19.1 – 19.7 kΩ		
TO sensor output voltage	Normal	1.3 V and less	
	Leaning	3.8 V and more	
Injector voltage	Battery voltage		
Ignition coil primary peak voltage	150 V and more (when cranking)		⊕ :W ⊖ :Ground
PAIR solenoid valve resistance	20 – 24 Ω at 20 °C (68 °F)		
HO2 sensor resistance	11.5 – 14.5Ω at 23 °C (73.4 °F)		
HO2 sensor output voltage	I dle speed	0.3 V and less	
	3 000 r/min	0.7 V and more	

THROTTLE BODY

ITEM	SPECIFICATION	
	E-02, 03, 19, 28, 54	E-33
ID No.	15G0	15G1
Bore size	37.2 mm (1.46 in)	←
Fast idle r/min.	1600 – 2000 r/min.	←
Idle r/min.	1400 ± 100 r/min.	←
Idle air screw opening	2 turns out	←
IAC valve resistance	Approx.3 – 9 Ω at 20 – 24 °C (68 – 75 °F)	←
Throttle cable play	2.0 – 4.0 mm (0.08 – 0.16 in)	←

THERMOSTAT + RADIATOR + FAN + COOLANT

ITEM	STANDARD/SPECIFICATION		LIMIT
Thermostat valve opening temperature	Approx.82 °C (180 °F) ± 1.5		—
Thermostat valve lift	Over3.0 mm at 95 °C (203 °F)		—
Engine coolant temperature sensor resistance	20 °C (68 °F)	Approx.2.58 kΩ	—
	40 °C (104 °F)	Approx.1.14 kΩ	—
	80 °C (176 °F)	Approx.0.28 kΩ	—
	100 °C (212 °F)	Approx.0.16 kΩ	—
Radiator cap valve opening pressure	107.9 – 137.3 kPa (1.1 – 1.4 kgf/cm², 16 – 20 psi)		—
Cooling fan thermo-switch operating temperature	ON	93 – 103 °C (199 – 217 °F)	—
	OFF	87 – 97 °C (189 – 207 °F)	—
Engine coolant type	Use an anti-freeze/coolant compatible with aluminum radiator, mixed with distilled water only, at the ratio of 50:50.		—
Engine coolant including reserve	Reserve tank side	Approx.250 ml (8.45/8.80 US/Imp oz)	—
	Engine side	Approx.1 300 ml (43.9/45.8 US/Imp oz)	—

ELECTRICAL

Unit:mm (in)

ITEM	STANDARD/SPECIFICATION		NOTE
Spark plug	Type	NGK:CR7E DENSO:U22ESR-N	
	Gap	0.7 – 0.8 (0.28 – 0.03 in)	
Spark performance	8.0 mm (0.31 in) and over at 1 atm.		
CKP sensor resistance	180 – 288 Ω		G-Bl
CKP sensor peak voltage	4.5 V and more		⊕ :G/W ⊖ :Bl
Ignition coil resistance	Primary	3 – 5 Ω	
	Secondary	17 – 30 kΩ	
Ignition coil primary peak voltage	150 and more		⊕ :W ⊖ :Ground
Generator coil resistance	Charging	0.2 – 0.6 Ω	Y – Y
Generator no-load voltage (When cold)	55 V and more at 5 000 r/min.		
Generator Max. output	Approx.375 W at 5 000 r/min.		
Regulated voltage	14.0 – 15.5 V at 5 000 r/min.		
Starter relay resistance	3 – 6 Ω		
Battery	Type designation	FT12A-BS	
	Capasity	12 V36 kC (10 Ah) /10 HR	
Fuze size	Head-light HI	10 A	
	Head-light LO	10 A	
	Meter	10 A	
	Ignition	10 A	
	Turn signal	15 A	
	Power source	10 A	
	Main	30 A	

WATTAGE

Unit:W

ITEM		STANDARD/SPECIFICATION	
		E-02,19,54	E03,28,33
Headlight	HI	35 × 2	←
	LO	35 × 2	←
Parking or position light		5 × 2	
Brake light/Taillight		21/5 × 2	←
Turn signal light		21 × 4	←
License light		5	←
Instrument panel light		1.7 × 3	←
Oil change indicator light		1.7	←
FI indicator light		1.7	←
Brake-lock indicator light		1.7	←
High beam indicator light		1.7	←
Turn signal indicator light		1.7 × 2	←
Trunk light		5	←

BRAKE + WHEEL

Unit:mm (in)

ITEM	STANDARD		LIMIT
Brake disc thickness	Front	4.5 ± 0.2 (0.18 ± 0.008)	4.0 (0.16)
	Rear	5.5 ± 0.2 (0.22 ± 0.008)	4.5 (0.18)
Brake disc runout	—		0.30 (0.01)
Master cylinder bore	Front	11.000 – 11.043 (0.433 – 0.435)	—
	Rear	14.000 – 14.043 (0.551 – 0.553)	—
Master cylinder piston diameter	Front	10.957 – 10.984 (0.431 – 0.432)	—
	Rear	13.957 – 13.984 (0.549 – 0.551)	—
Brake caliper cylinder bore	Front	33.960 – 34.010/22.650 – 22.700 (1.337 – 1.339/0.892 – 0.894)	—
	Rear	25.400 – 25.450 (1.000 – 1.002)	—
Brake caliper piston diameter	Front	33.878 – 33.928/22.568 – 22.618 (1.334 – 1.336/0.889 – 0.890)	—
	Rear	25.318 – 25.368 (0.997 – 0.999)	—
Wheel rim runout	Axial	—	2.0 (0.08)
	Radial	—	2.0 (0.08)
Wheel axle runout	Front	—	0.25 (0.01)
	Rear	—	0.25 (0.01)
Wheel rim size	Front	13M/C × MT3.00	—
	Rear	13M/C × MT3.50	—

SUSPENSION

Unit:mm (in)

ITEM	STANDARD		LIMIT
Front fork stroke	100 (3.94)		—
Front fork spring free length	330.4 (13.01)		324 (12.76)
Front fork oil type	SUZUKI FORK OIL G-10 (#10)		—
Front fork oil capacily (each leg)	284 mL		—
Front fork oil level	96 (3.78)		—
Rear wheel travel	100 (3.94)		—
Rear shock absorber spring adjuster	Standard	4 – 1/2 turns out from softest position (9 clicks)	—
	Range	17 turns (34 clicks)	—

TIRE

ITEM		STANDARD		LIMIT
Cold inflation tire pressure	Solo riding	Front	175 kPa (1.75 kgf/cm², 25 psi)	—
		Rear	200 kPa (2.00 kgf/cm², 28 psi)	—
	Dual riding	Front	175 kPa (1.75 kgf/cm², 25 psi)	—
		Rear	225 kPa (2.25 kgf/cm², 32 psi)	—
Tire size		Front	110/90 – 13 M/C 55 P	—
		Rear	130/70 – 13 M/C 63 P	—
Tire type		Front	BRIDGESTONE HOOP B03G	—
		Rear	BRIDGESTONE HOOP B02G	—
Tire tread depth (Recommended depth)		Front	—	1.6 mm (0.06 in)
		Rear	—	2.0 mm (0.08 in)

FUEL + OIL

ITEM	SPECIFICATION		NOTE
Fuel type	Gasoline used should be graded 91 octane or higher. An unleaded gasoline is recommended.		
Fuel tank capacity	Including reserve	13.0L (13.7/11.4 US/Imp qt)	
	Fuel meter red zone	Approx.3.0L (3.17/2.64 US/Imp qt)	
Engine oil type	SAE 10W-40, API, SF or SG		
Engine oil capacity	Oil change	1.9 L (2.00/1.67 US/Imp qt)	
	Filter change	2.0 L (2.11/1.76 US/Imp qt)	
	Overhaul	2.3 L (2.43/2.02 US/Imp qt)	
Transmission oil capacity	Oil change	190 ml (6.42/6.69 US/Imp oz)	
	Overhaul	200 ml (6.76/7.04 US/Imp oz)	

EMISSION CONTROL INFORMATION

CONTENTS

EMISSION CONTROL SYSTEMS

FUEL INJECTION SYSTEM

AN400 motorcycles are equipped with a fuel injection system for emission level control.

This fuel injection system is precision designed, manufactured and adjusted to comply with the applicable emission limits.

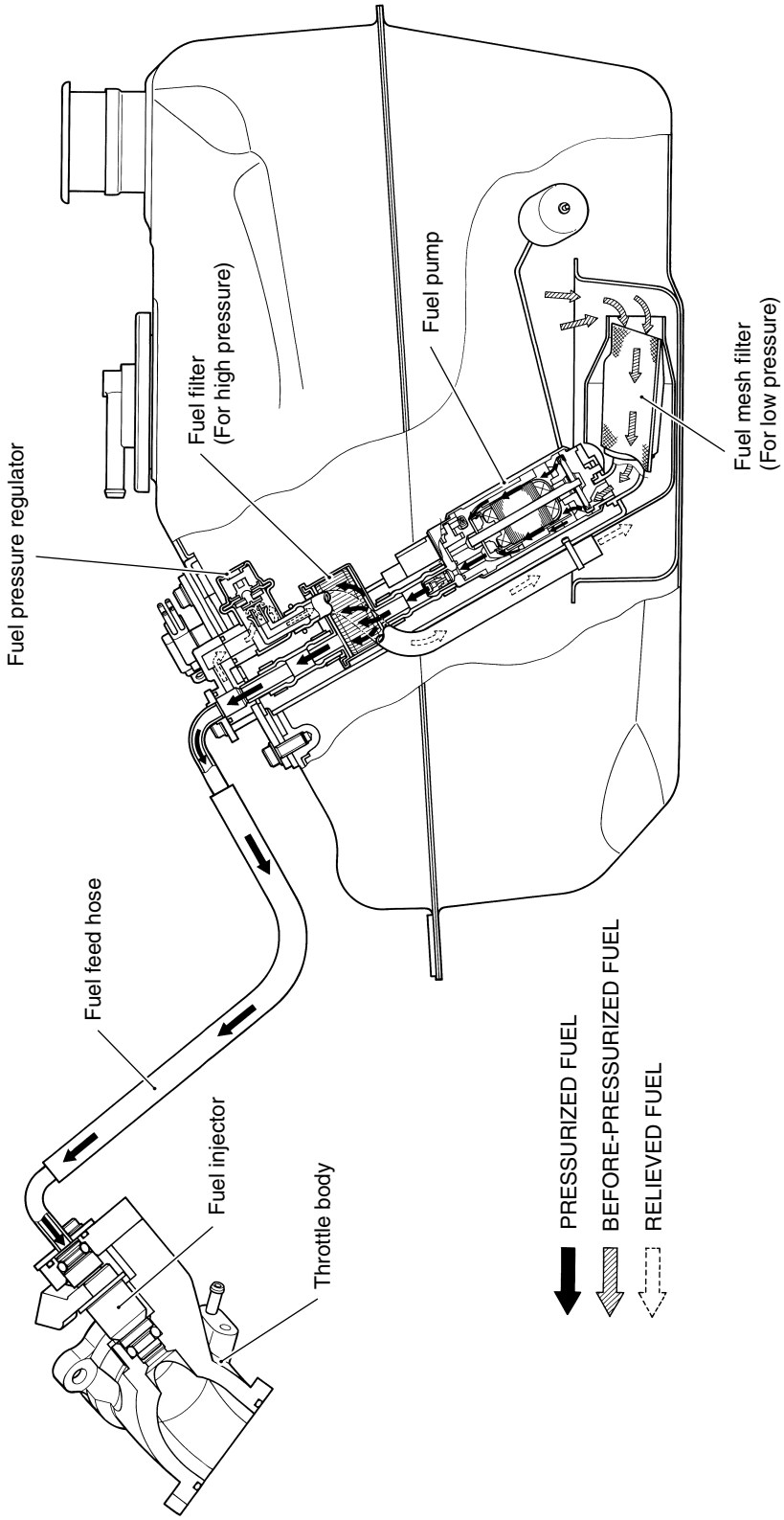

CRANKCASE EMISSION CONTROL SYSTEM

The engine is equipped with a PCV system. Blow-by gas in the engine is constantly drawn into the crankcase, which is returned to the combustion chamber through the PCV(breather) hose, air cleaner and throttle body.

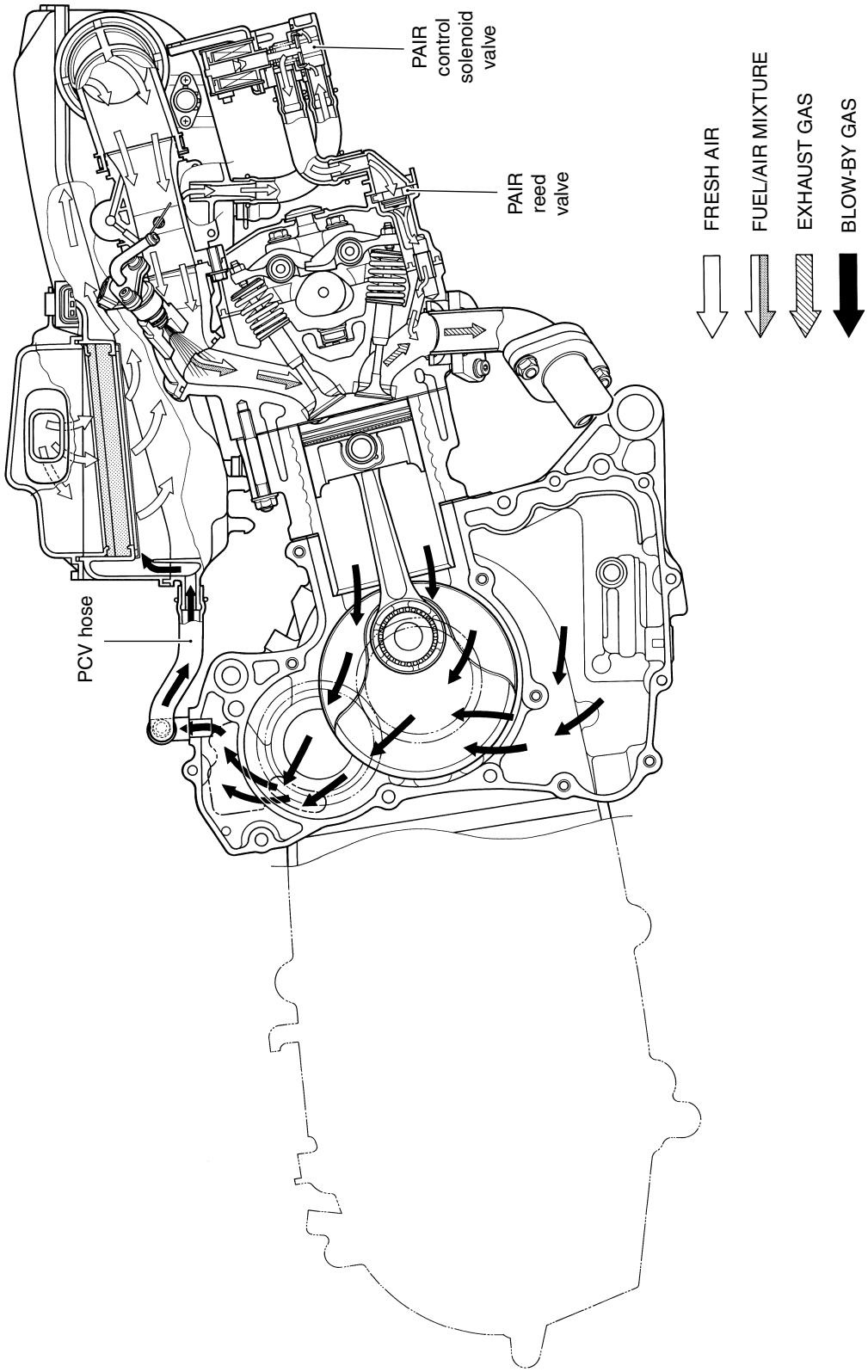

EXHAUST EMISSION CONTROL SYSTEM (PAIR SYSTEM)

The exhaust emission control system is composed of the PAIR system and THREE-WAY CATALYST system. The fresh air is drawn into the exhaust port with the PAIR solenoid valve and PAIR reed valve. The PAIR solenoid valve is operated by the ECM, and the fresh air flow is controlled according to the TPS, ECTS, IATS, IAPS and CKPS.

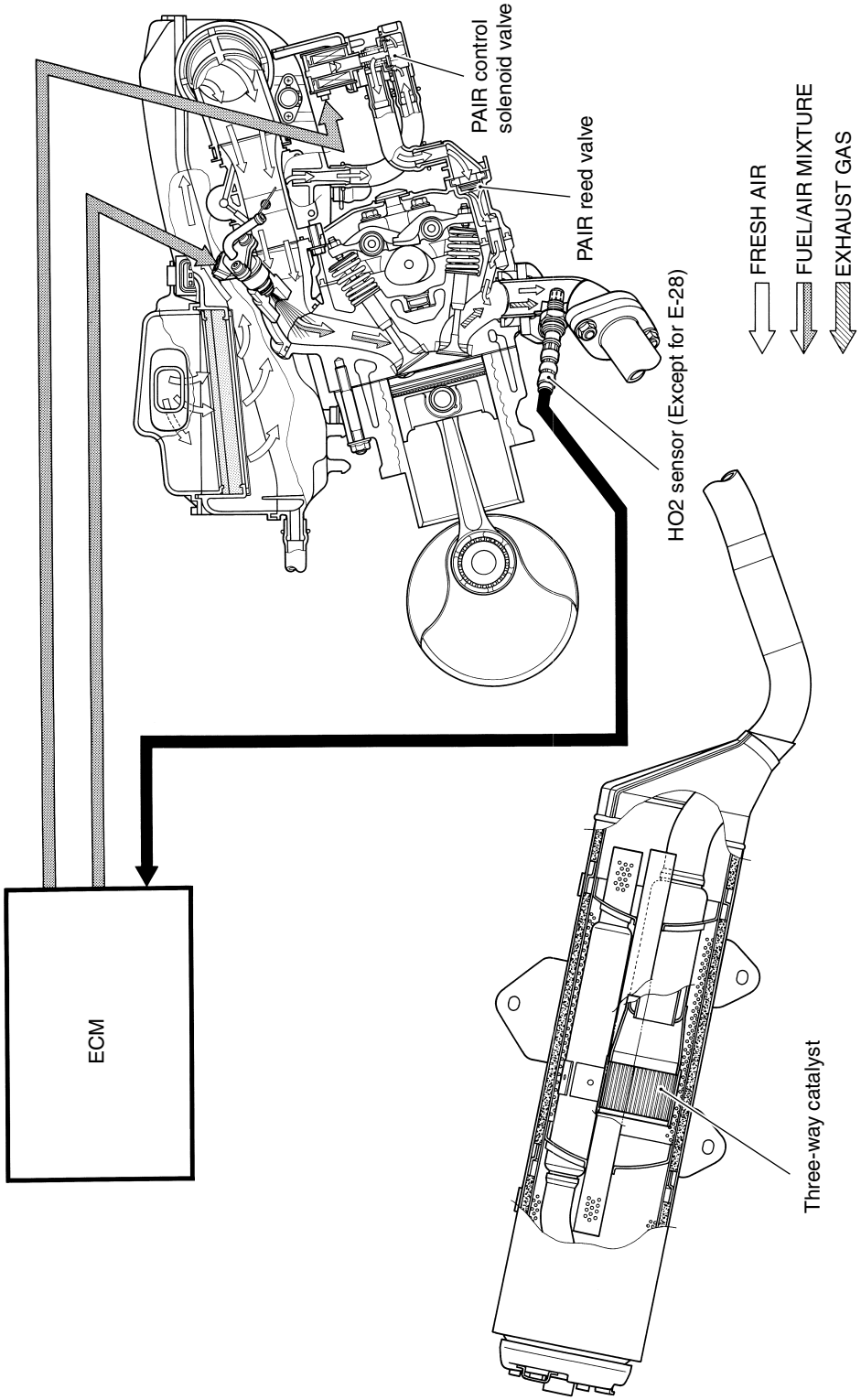

NOISE EMISSION CONTROL SYSTEM

TAMPERING WITH THE NOISE CONTROL SYSTEM PROHIBITED: Local law prohibits the following acts or the causing thereof:

1. The removal or rendering inoperative by any person, other than for purposes of maintenance, repair or replacement, of any device or element of design incorporated into any new vehicle for the purpose of noise control prior to its sale or delivery to the ultimate purchaser or while it is in use, or
2. The use of the vehicle after such device or element of design has been removed or rendered inoperative by any person.

AMONG THOSE ACTS PRESUMED TO CONSTITUTE TAMPERING ARE THE ACTS LISTED BELOW:

- Removing or puncturing the muffler, baffles, header pipes, screen type spark arrester (if equipped) or any other component which conducts exhaust gases.
- Removing or puncturing the air cleaner case, air cleaner cover, baffles or any other component which conducts intake air.
- Replacing the exhaust system or muffler with a system or muffler not marked with the same model specific code as the code listed on the Motorcycle Noise Emission Control Information label.

PAIR (AIR SUPPLY) SYSTEM INSPECTION

HOSE

- Remove the trunk box. (☞7-18)
- Inspect the hose ① for wear or damage.
- Inspect that the hose ① is securely connected.

PAIR REED VALVE

- Remove the trunk box. (☞7-18)
- Remove the PAIR reed valve cover ①.

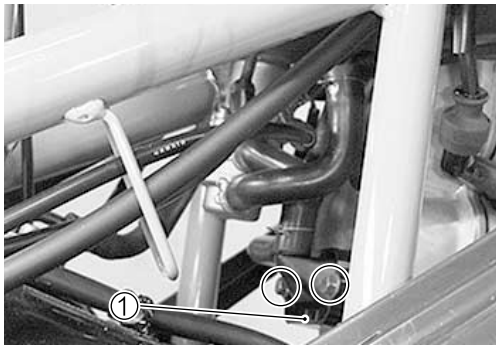

- Inspect the reed valve for the carbon deposit.
- If the carbon deposit is found in the reed valve, replace the PAIR reed valve with a new one.
- Installation is in the reverse order of removal.

PAIR CONTROL SOLENOID VALVE

- Remove the trunk box. (☞7-18)
- Remove the air cleaner box. (☞3-4)
- Disconnect the PAIR control solenoid valve coupler ①.
- Disconnect the PAIR hose ②.
- Remove the PAIR control solenoid valve ③.

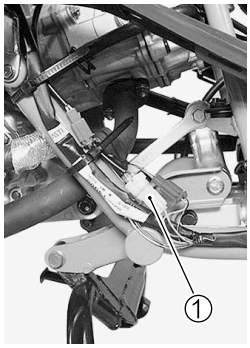

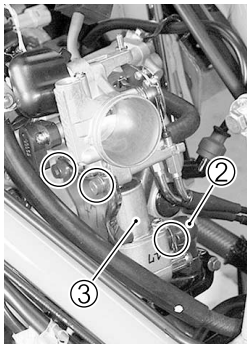

- Check that air flows through the air inlet port to the air outlet port.
- If air does not flow out, replace the PAIR control solenoid valve with a new one.

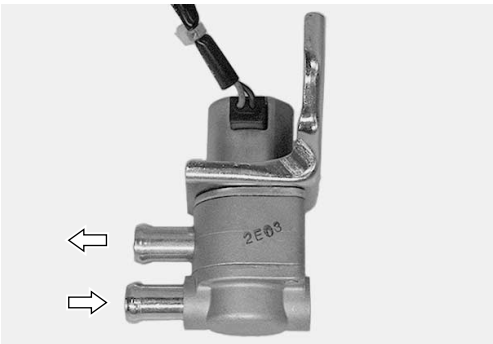

- Connect the 12 V battery to the PAIR control solenoid valve terminals and check the air flow.
- If air does not flow out, the solenoid valve is in normal condition.

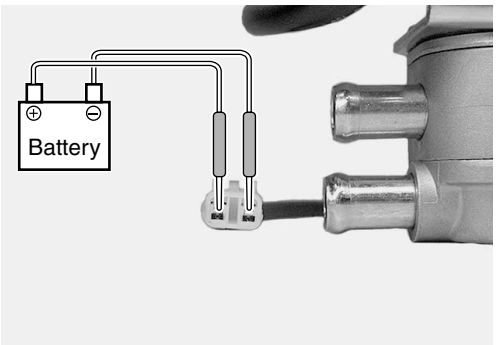

- Check the resistance between the terminals of the PAIR control solenoid valve.

DATA Resistance: 20 – 24 Ω (at 20 °C/68 °F)

TOOL 09900-25008: Multi circuit tester set

Tester knob indication: Resistance (Ω)

If the resistance is not within the standard range, replace the PAIR control solenoid valve with a new one.

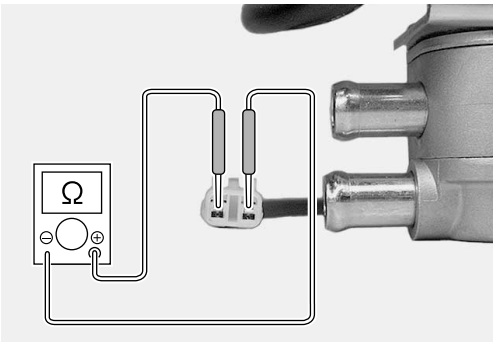

- Installation is in the reverse order of removal.
- Connect the PAIR control solenoid valve coupler securely.

PAIR (AIR SUPPLY) SYSTEM HOSE ROUTING

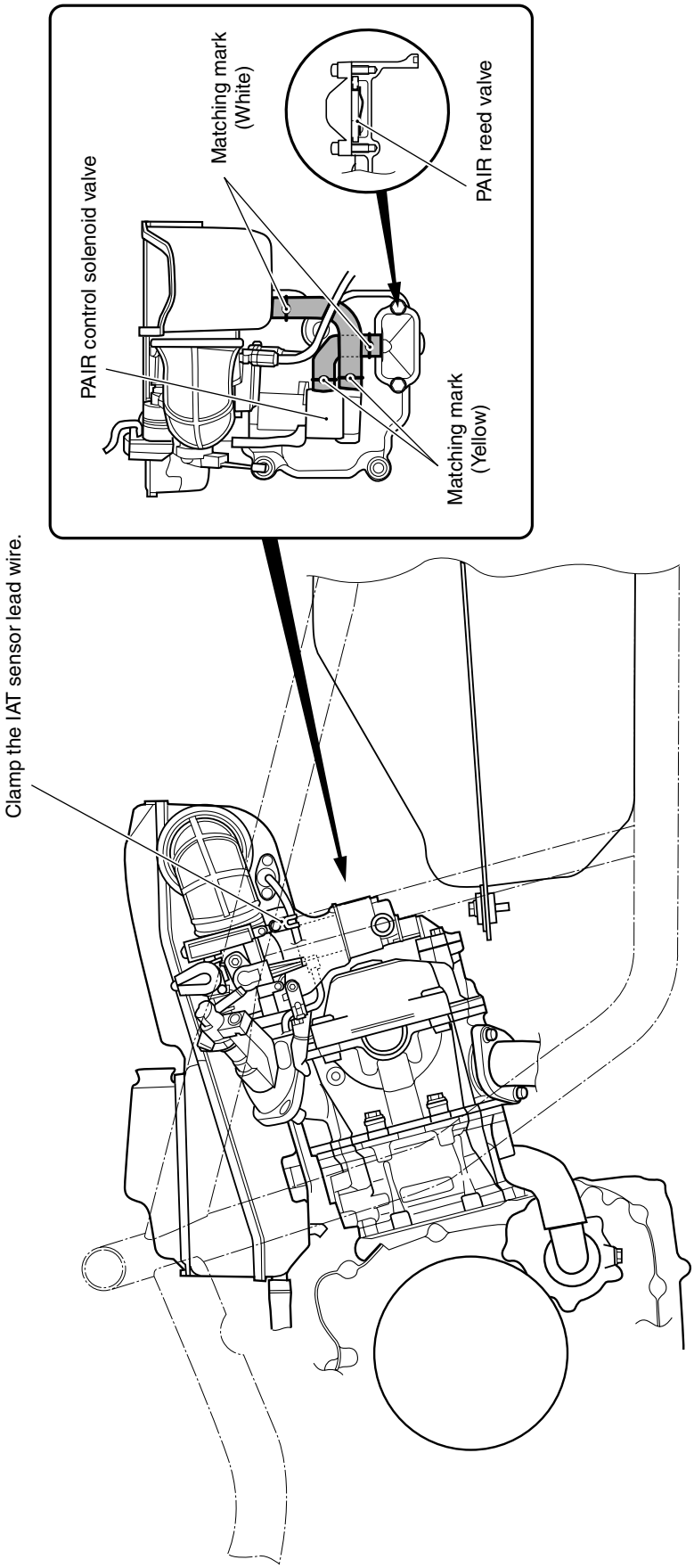

HEATED OXGEN SENSOR (HO2S) INSPECTION

- Remove the foot board. (☞7-19)
- Disconnect the HO2 sensor coupler.
- Remove the HO2 sensor unit.

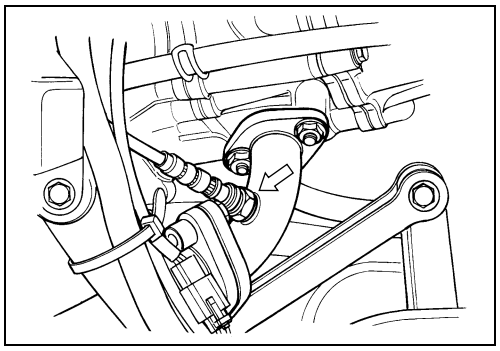

⚠ WARNING

Do not remove the HO2 sensor while it is hot.

CAUTION

Be careful not to expose it to excessive shock.
Do not use an impact wrench while removing or installing the HO2 sensor unit.
Be careful not to twist or damage the sensor lead wire.

- Inspect the HO2 sensor and its circuit referring to flow table of the malfunction code (C44).
- Disconnect the HO2 sensor coupler.
- Check the resistance between the terminals (white – white) of the HO2 sensor.

DATA Resistance: 11.5 – 14.5 Ω (at 23 °C/73.4 °F)

TOOL 09900-25008: Multi circuit tester set

Tester knob indication: Resistance (Ω)

If the resistance is not within the standard range, replace the HO2 sensor with a new one.

NOTE:
** Temperature of the sensor affects resistance value largely.*
** Make sure that the sensor heater is at correct temperature.*

- Connect the HO2 sensor coupler securely.

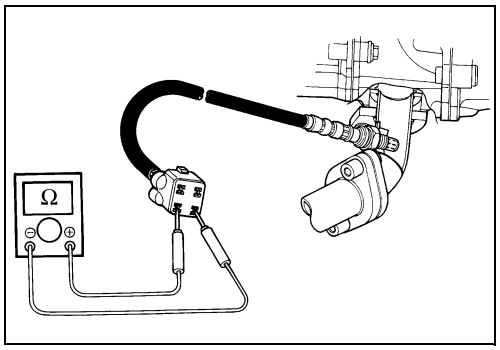

- Installation is in the reverse order of removal.

CAUTION

Do not apply oil or other materials to the sensor air hole.

- Tighten the sensor unit to the specified torque.

HO2 SENSOR: 47.5 N·m (4.75 kgf-m, 34.3 lb-ft)

- Route the HO2 sensor lead wire into the frame.
- Connect the HO2 sensor coupler.

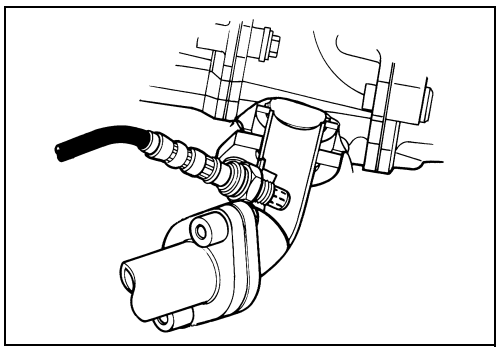

Prepared by

SUZUKI MOTOR CORPORATION

November, 2002
Part No.99500-34080-01E
Printed in Japan

SUZUKI MOTOR CORPORATION

Printed in Japan Ⓒ TK
K3